REMI

GEARED MOTORS 'NZ' SERIES ENGAGED TO WORK

IS : 12615

CE

ISI

For Electric Motors

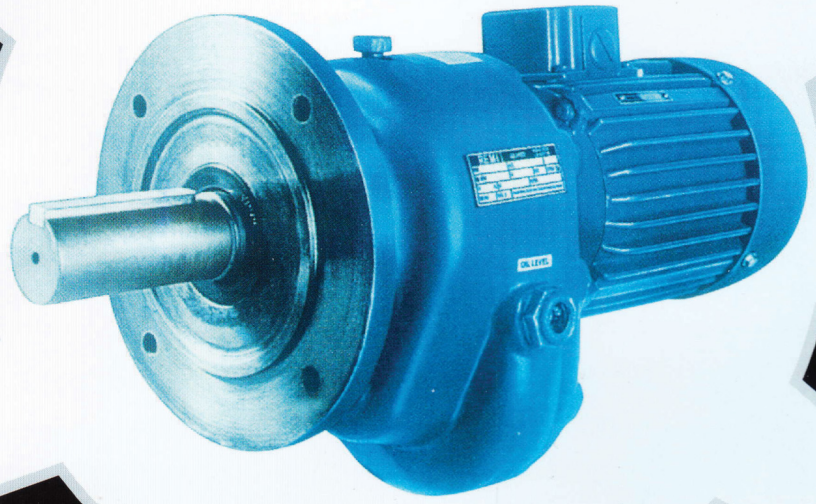

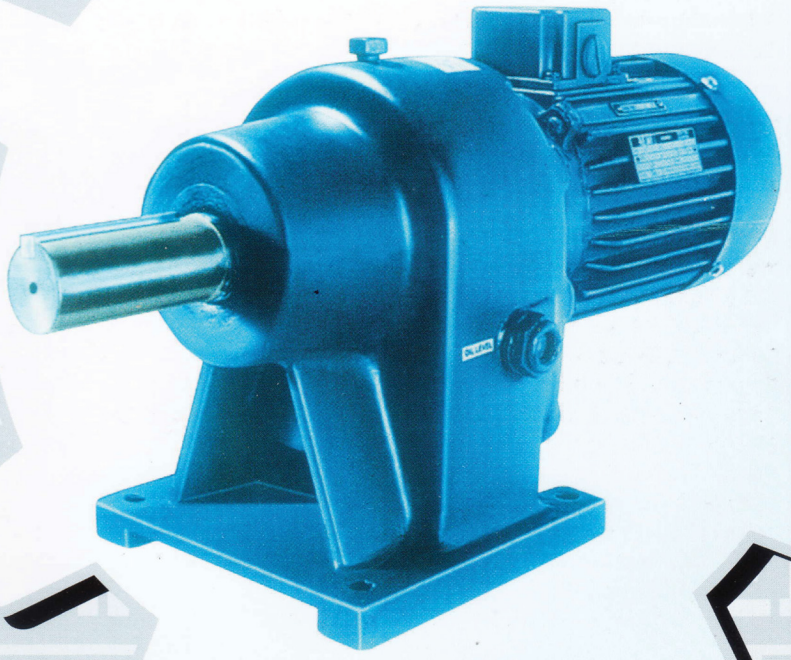

Why REMI Motors?

- German Technology
- Manufactures Own Electric Motors
- Vacuum Impregnation of Winding
- In House Gear manufacturing/ Heat Treatment
- Low Noise & Vibration
- Can offer Non Standard/ Custom Built Special Motors
- Price & Delivery Advantage
- All India Sales & Service Back Up

'NZ' SERIES GEARED MOTORS

REMI has been one of the pioneering manufacturer of In-line Helical geared motors, under license from VEM in 1976. Since then REMI has also launched a second generation of geared motors in the mid 80s, with help of STEPHAN Works GmBH & Co. During this period, REMI has collected vast amounts of field date regarding application of geared motors under Indian conditions. REMI has utilized this Data bank to redesign its existing line, resulting in REMI 'NZ' series In-line Helical geared motors, with the following advantages -

- Both the bearings of output shaft are located in housing as in "Block" or 'Unicase' housing concept, thereby eliminating chances of misalignment even under high radial loads on the output shaft.
- For extra high radial and/or axial loads reinforced bearings can be provided if specific application demands.
- In the unlikely event of motor winding burn out, wound stator can be easily. removed for rewnding without disturbing the Gearbox, Similarly, Gearbox servicing can be carried out without disturbing the motor.
- Higher power to weight ratio due to compact design.

RANGE : REMI 'NZ' series geared motors are offered in exhaustive range with output from 0.12 kW (0.16 HP) to 30 kW (40 HP) and output speed from 1.5 RPM to 500 RPM. The complete series consists of ten sizes of two stage and eight sizes of three stage gear Boxes for 'NZ' series geared motors.

CONSTRUCTIONAL FEATURES : Gear box housing and cover are of high quality graded cast iron and have sturdy internal ribs. Ample dimensions of gear wheels, shafts and ball bearings ensure long life of the gear box. The gear wheels are made of wear-resistant special alloy. They are case hardened by modern hardening process ensuring practically zero distortion during heat treatment. Gear lapping ensures finer high spot removal. Subsequent phosphating improves wear and corrosion resistance properties as also dampens gear noise.

REMI has in-house gear manufacturing, heat treatment facility backed by full fledged machine shop, with state of art CNC machining centres, assembly, testing line and in house electrical motor manufacturing.

EFFICIENCY & NOISE : In todays competitive scenario, equipment designers are under constant pressure to improve the efficiency of the equipment and reduce noise level. REMI 'NZ' series geared motors offer ideal solution to the designers to meet these goals. Due to original German (VEM) design of its electric motor complemented by in house manufacturing of all the motor components together with high efficiency of gears, as a result of modern production methods, it is possible to regard motor output and gearbox output as being practically equal, except in case of motors below 0.5 HP, a slight reduction can be observed. REMI 'NZ' series geared motors have noise levels which are within internationally accepted limits.

ELECTRIC MOTORS : REMI 'NZ' Series geared motors are normally offered with electric motors suilable for 415v ± 10% 50 Hz ± 5%, ProtectionIP55 and class of Insulation is F. Motors for other operating conditions of voltage, frequency etc. can be offered or request. Motors can also be supplied at additional cost with epoxy encapsulation of winding and epoxy paint to withstand operation environment such as high concenration of corrosive chemical gases and vapors.

SPECIAL VERSIONS : REMI 'NZ' series geared motors can be offered with dual speed, flame proof, brake versions on request. It may be noted that REMI 'NZ" series geared motors are also suitable for operating with inverters for speed variation, however it will be necessary to check with us for right selection of geared motor in case you intend to use with inverter.

SELECTION OF CORRECT SIZE OF GEARED MOTOR : The catalogue shows the rated H.P., R.P.M. & Torque of the geared motor. Also for the same H.P., R.P.M. and Torque different type of motors are offtered withdifferent service factor for ease of selection for various application.

Depending on the application, the geared motor with proper service factor should be selected. The serivce factor for the given application can be calcuated as under.

Minimum Serivce factor required = C1 x C2 x C3

Where : C1 = Coefficient of operating condition.

This depends on type of load, (See Table No.4) duly hours or total number of working hours per day and number of starts & stops hour (See Table no.1) By referring to these two tables the value of C1 can be determined.

C2 = Coefficient of temperature condition.

C2 = 1.0, Where ambient temperature is maximum 40^{0}C. For higher ambient temperatures, select C2 from table No.2.

C3 = Coefficient of mounting site elevation.

C3 = 1.0, if the motor is used at a site with elevation upto 1000 Meters. For higher elevations, select C3 from table No.3.

If the application is special which is not covered in this catalogue or very severe, then please refer to us with complete application details, to enable us to offer a suitable geared motor.

IMPORTANT NOTE : It is very essential to select a proper gear motor for trouble free long life of the motor. In case of difficulty in selection, please refer the matter to us withfull application details, instead of selecting a motor ad - hoc or under ignorance. In case of difficulty in selection, please call for our applcation data sheet. After receipt of duly filled up application data sheet we will select a proper geared motor for you.

In case Geraed Motor is to be used for agitator/mixer application, it is strongly recommended that between the agitator shaft and the geared motor shaft supporting stool be provided with thrust bearing so that excess load is not transfered from agitator shaft to motor shaft and the gear box bearing is protected from over loads.

GEARED MOTORS 'NZ' SERIES ENGAGED TO WORK

TABLE NO.1
SELECTION OF OPERATING FACTOR C1.

	MOTOR STARTING PER HOUR								
	1 TO 6			7 TO 12			13 TO 20		
	DAILY DUTY IN HOURS								
TYPE OF LOAD	0 to 8	9-16	17-24	0 to 8	9-16	17-24	0 to 8	9-16	17-24
1. Uniform operation, no torque surges, small accelerated mass	1.00	1.12	1.25	1.12	1.25	1.40	1.25	1.40	1.60
2. Irregular operation, medium torque surges, medium accelerated mass.	1.25	1.40	1.60	1.40	1.60	1.80	1.60	1.80	2.00
3. Irregular operation, more severe torque surges, heavier accelerated mass.	1.60	1.80	2.00	1.80	2.00	2.24	2.00	2.24	2.50

Note : For more than 20 starts per hour, please refer to us.

TABLE NO. 2
SELECTION OF OPERATING FACTOR C2.

AMBIENT TEMPERATURE IN °C		
0 to 40	40 to 45	45 to 50
1.0	1.08	1.1

TABLE NO. 3
SELECTION OF OPERATING FACTOR C3.

MOUNTING SITE ELEVATION IN METERS ABOVE SEA LEVEL.		
0 to 1000	1000 to 2000	2000 to 3000
1.0	1.05	1.11

TABLE NO. 4
TYPE OF LOAD ACCORDING TO TYPE OF APPLICATION

1. Uniform operation, no torque surges, small accelerated mass.	2. Irregular operation, medium torque surges, medium accelerated mass.	3. Irregular operation, more severe torque surges, heavier accelerated mass.
Drilling machines	Balancing machines	Plates shears
Filling machines	Bending machines	Tumbling barrels
Bottle cleaning and filling machines	Turning lathes	Centrifuges
Flat belt conveyors	Rotary toble drives	Proof-presses
Centrifugal pumps	Mixers	Moulding machines (Heavy duty)
Fans	Heavy agitators	Piston Pumps
Assembly belts	Packing machines	Stamping presses
Light-weight mixers	Winches	Paper cutting machines
Light-weight stirrers	Cement mixers	Crushers
Inclined elevators and conveyor belts	Tumbling barrels	Oscillating belt conveyors
Embroidery machines	Kneaders	Calenders & rollers for rubber industry
Machine tool feeds	Canning machines	Foundry machines
Work piece drives	Drives of cranes, crabs and hoists	Folding machines
Washing machine	Freignt elevators	Briquetting presses
Constant speed Screw conveyors	Sliding doors	Eccentric presses
Lifting platforms	Slewing drives	Mechanical hammers
valve controls	Brick works machinery	Articulated plate conveyors
Screw conveyors	Moulding machines	Concrete work
Container scales	Mining fans	Rolling mill
Light elevator	Gear & Rotary pumps	Weiding rigs
Ventilators	Flour mill / Dal mill	Crushing machines
Roller shutter gates	Brush making machines	Separators
Tube filling machines	Dosing machines	Punching machines
Laundry machines	Rotary kilns	Vibrators
Low capacity lifts	Bucket elevators	Bailing presses
	Furnace doors	
	Tanning barrels	

PERMISSIBLE LOADS AT THE OUTPUT-SHAFT :
The permissible radial & axial loads for gear boxes on their output shaft are given in table No.5. The figures are based on bearing life of 8000 hrs. at their corresponding speeds and under the provision that radial loads are applied at half the length of the output shaft. Where only radial or only axial loads are transmitted. The shafts can be subjected to the full amount of Fr or Fa given in the table.

For shafts subjected to radial and axial loads at the same time, radial load is to be reduced by the amount of the thrust load.

With the load figures of the table and following formula, it is possible to find the minimum permissible diameter of gear wheels, sprocket wheels, or belt pulleys.

FOR GEAR WHEELS & SPROCKET WHEELS.

$$D_{min} = \frac{2000 * M}{F_r}$$

FOR V-BELT PULLEYS.

$$D_{min} = \frac{4000 * M}{F_r}$$

WHERE :

Dmin = Min. Permissible diam... (mm)
M = Torque to be transmitted... (Nm)
Fr = Permissible radial load at the output shaft ... (N)

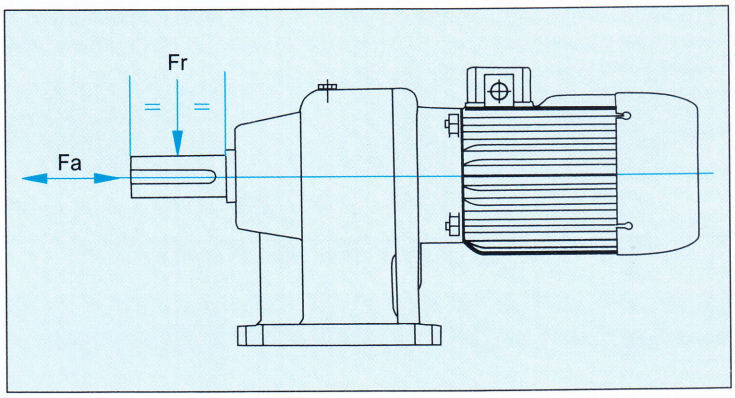

Tables No. 5

Permissible Radial (Fr) and Axial (Fa) Loads on Output Shaft

Gear Box	Speed	Fr	Fa
NZA	≤ 17	650	220
	19 - 29	650	200
	30 - 49	600	200
	50 - 80	500	170
	81 - 145	400	140
	> 150	300	110
NZB	≤ 19	1150	380
	20 - 29	1100	350
	30 - 53	1050	350
	54 - 86	950	320
	87 - 135	750	250
	> 140	650	220
NZO	< 14	2450	850
NZOA	15 - 19	2400	830
	20 - 30	2300	820
	31 - 53	2250	810
	54 - 80	1820	650
	85 - 125	1500	540
	> 130	780	310
NZ1	< 18	5250	1900
	19 - 25	5150	1860
	26 - 39	5100	1830
	40 - 62	5000	1800
	63 - 85	3800	1360
	90 - 132	3200	1150
	> 140	2700	970
NZ2	≤ 14	6300	2300
NZ2B	15 - 19	6200	2250
	20 - 29	6100	2180
	30 - 48	6000	2150
	49 - 75	4700	1700
	80 - 130	4000	1450
	> 135	3500	1250
NZ3	≤ 14	7300	2650
NZ30	15 - 19	7200	2600
	20 - 29	7100	2550

Gear Box	Speed	Fr	Fa
NZ3	30 - 49	7000	2500
	50 - 80	5400	1950
	82 - 135	4500	1630
	> 140	4000	1430
NZ4	≤ 14	8400	3050
NZ40	15 - 19	8200	2950
	20 - 29	8100	2880
	30 - 48	8000	2850
	50 - 78	6000	2150
	80 - 120	5000	1800
	> 130	4500	1600
NZ6	≤ 13	9700	3700
NZ62	14 - 18.5	9450	3600
	19 - 28	9200	3550
	29 - 50	9000	3500
	52 - 80	8000	3100
	81 - 125	7000	2800
	> 130	6000	2500
NZ7	≤ 14	10800	4800
NZ73	15 - 19.5	10500	4700
	20 - 29	10200	4600
	30 - 49	10000	4500
	50 - 79	9000	4000
	80 - 122	8000	3500
	> 125	7000	3000
NZ8	≤ 14	14000	6400
NZ84	15 - 20	13600	6250
	21 - 30	13300	6100
	31 - 50	13000	6000
	51 - 75	11000	5000
	76 - 114	9500	4500
	> 115	8500	4000
NZ10	≤ 50	50000	-
	51 - 80	40000	-
	> 80	35000	-

LUBRICATION :

Gears are splash lubricated by oil. It may be noted that **Geared motors are delivered without oil and before starting oil must be filled up to oil level indicator.**

First oil change must be done after operating 400 hours. Consequent oil changes after every 5000 hours of operation are recommended.

RECOMMENDED OIL GRADES BASED ON AMBIENT TEMPERATURE OF 10-45°C :				
Output RPM	Oil Grade	Indian Oil	Hindustan Petroleum	Bharat Petroleum
> 225	ISO VG 150	SERVOMESH SP 150	PARTHAN EP 150	AMOCAM 150
225-25	ISO VG 220	SERVOMESH SP 220	PARTHAN EP 220	AMOCAM 220
25-5	ISO VG 320	SERVOMESH SP 320	PARTHAN EP 320	AMOCAM 320
<5	ISO VG 460	SERVOMESH SP 460	PARTHAN EP 460	AMOCAM 460

MOUNTING POSITIONS

Position of Oil level indicator, Breathing Plug and Drain plug change depending on mounting position. It is therefore very important to specify mounting position as per chart given below at the time of ordering. In absence of any indication at the time of ordering, it will be presumed that mounting is B3 for foot mounted and B5 for flange mounted.

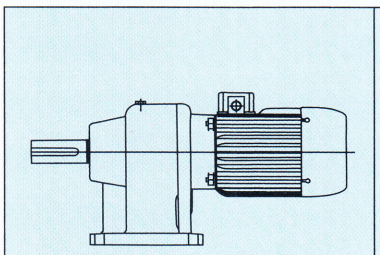
B3

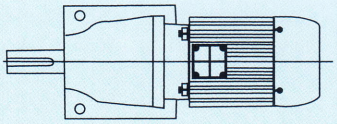
B6

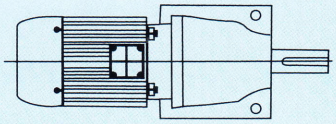
B7

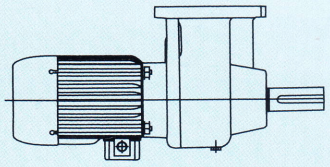
B8

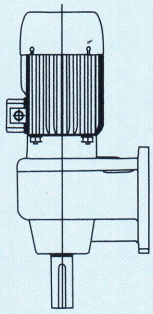
V5

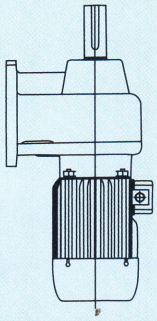
V6

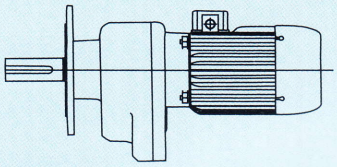
B5

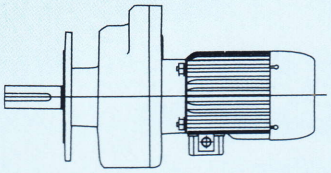
B5a

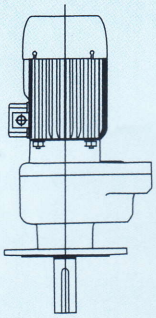
V1

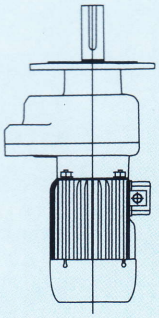
V3

REMI

REMI 'NZ' SERIES GEARED MOTOR RATING CHART

MOTOR k.W (H.P.)	OUTPUT R.P.M.	GEARED MOTOR FRAME SIZE	OUTPUT TORQUE (Nm)	SERVICE FACTOR AGMA I	AGMA II	AGMA III
0.12 (0.16)	1.5	Nz62 80 A/8F	657.0	–	–	2.2
	3.5	NZ2B 71 A/6	290.0	1.3	–	–
	3.4	NZ30 63 A/4	274.0	–	1.9	–
	3.3	NZ40 63 A/4	279.0	–	–	2.8
	4.5	NZ2B 63 A/4	218.0	–	1.6	–
	4.6	NZ30 63 A/4	202.0	–	–	2.8
	5.4	NZ2B 63A/4	180.0	–	1.6	–
	5.2	NZ30 63 A/4	178.0	–	–	2.8
	7.7	NZ0A 63 A/4	128.0	1.0	–	–
	7.9	NZ2B 63 A/4	120.0	–	–	2.9
	8.7	NZ0A 63 A/4	114.0	1.0	–	–
	8.8	NZ2B 63 A/4	108.0	–	–	3.0
	10	NZ0A 63 A/4	90.0	–	1.6	–
	10	NZ2B 63 A/4	90.0	–	–	3.0
	16	NZB 80 A/8F	67.0	1.0	–	–
	16	NZ0 80 A/8F	67.0	–	–	2.2
	20	NZB 71 A/6	52.0	–	1.5	–
	20	NZ0 71 A/6	52.0	–	–	2.9
	26	NZB 71 A/6	39.5	–	1.6	–
	26	NZ0 71 A/6	39.5	–	–	3.8
	31	NZA 63 A/4	31.9	1.0	–	–
	31	NZB 63 A/4	31.9	–	–	2.1
	35	NZA 63 A/4	28.0	1.1	–	–
	35	NZB 63 A/4	28.0	–	–	2.1
	40	NZA 63 A/4	25.3	1.2	–	–
	40	NZB 63 A/4	25.3	–	–	2.5
	44	NZA 63 A/4	23.5	1.2	–	–
	44	NZB 63 A/4	23.5	–	–	2.5
	50	NZA 63 A/4	19.6	–	1.4	–
	48	NZB 63 A/4	20.1	–	–	2.5
	54	NZA 63 A/4	17.5	–	1.5	–
	52	NZB 63 A/4	18.6	–	–	3.0
	60	NZA 63 A/4	15.7	–	1.6	–
	58	NZB 63 A/4	16.6	–	–	3.2
	67	NZA 63 A/4	14.4	–	1.7	–
	65	NZB 63 A/4	14.9	–	–	3.2
	74	NZA 63 A/4	13.0	–	1.7	–
	72	NZB 63 A/4	13.5	–	–	3.4
	76	NZA 63 A/4	12.5	–	1.9	–
	79	NZB 63 A/4	12.2	–	–	3.6
	85	NZA 63 A/4	11.2	–	1.9	–
	83	NZB 63 A/4	11.6	–	–	3.8
	94	NZA 63 A/4	10.2	–	–	2.0
	103	NZA 63 A/4	9.3	–	–	2.1
	112	NZA 63 A/4	8.5	–	–	2.2
	121	NZA 63 A/4	7.7	–	–	2.2
	132	NZA 63 A/4	7.2	–	–	2.3
	150	NZA 63 A/4	6.4	–	–	2.8
	165	NZA 63 A/4	5.8	–	–	2.9
	180	NZA 63 A/4	5.3	–	–	3.0
	200	NZA 63 A/4	4.8	–	–	3.1
	215	NZA 63 A/4	4.4	–	–	3.3
	232	NZA 63 A/4	4.1	–	–	3.4
	270	NZA 63 A/4	3.5	–	–	3.5
	317	NZA 63 A/4	3.0	–	–	3.7
	360	NZA 63 A/4	2.5	–	–	3.8
0.18 (0.25)	1.5	NZ62 80 A/B	1050.0	–	1.5	–
	1.5	NZ73 80 A/B	1050.0	–	–	2.2
	3.3	NZ30 63 B/4	448.0	1.3	–	–
	3.3	NZ40 63 B/4	446.0	–	1.7	–

MOTOR k.W (H.P.)	OUTPUT R.P.M.	GEARED MOTOR FRAME SIZE	OUTPUT TORQUE (Nm)	SERVICE FACTOR AGMA I	AGMA II	AGMA III
0.18 (0.25)	4.5	NZ2B 63 B/4	338.0	1.1	–	–
	4.5	NZ30 63 B/4	327.0	–	1.8	–
	4.4	NZ40 63 B/4	331.0	–	–	2.4
	5.3	NZ2B 63 B/4	287.0	1.1	–	–
	5.1	NZ20 63 B/4	288.0	–	1.8	–
	5.1	NZ40 63 B/4	285.0	–	–	2.5
	7.8	NZ2B 63 B/4	192.0	–	1.8	–
	7.4	NZ40 63 B/4	194.0	–	–	3.1
	8.7	NZ2B 63 B/4	171.0	–	1.9	–
	8.3	NZ40 63 B/4	172.0	–	–	3.2
	10	NZ0A 63 B/4	138.0	1.0	–	–
	10	NZ2B 63 B/4	138.0	–	–	2.2
	17	Nz0 80 A/8	92.4	–	1.8	–
	16	NZ2 80 A/8	96.4	–	–	4.4
	20	NZB 71 C/6	80.7	1.0	–	–
	20	NZ0 71 C/6	80.7	–	–	2.0
	26	NZB 71 C/6	61.8	1.1	–	–
	26	NZ0 71 C/6	61.8	–	–	2.6
	30	NZB 63 B/4	51.8	1.3	–	–
	30	NZ0 63.B/4	51.8	–	–	3.0
	35	NZB 63 B/4	45.1	–	1.4	–
	35	NZ0 63 B/4	45.1	–	–	3.4
	42	NZA 63 B/4	36.8	1.0	–	–
	40	NZB 63 B/4	39.5	–	1.6	–
	40	NZ0 63 B/4	39.5	–	–	3.5
	47	NZA 63 B/4	33.0	1.0	–	–
	46	NZB 63 B/4	34.3	–	1.6	–
	45	NZ0 63 B/4	34.3	–	–	3.7
	51	NZA 63 B/4	30.8	1.0	–	–
	50	NZB 63 B/4	31.0	–	1.6	–
	50	NZ0 63 B/4	31.0	–	–	4.4
	57	NZA 63 B/4	27.5	1.0	–	–
	54	NZB 63 B/4	29.2	–	1.9	–
	53	NZ0 63 B/4	29.1	–	–	4.7
	61	NZA 63 B/4	24.5	1.0	–	–
	58	NZB 63 B/4	25.9	–	–	2.0
	67	NZA 63 B/4	22.5	1.1	–	–
	65	NZB 63 B/4	23.2	–	–	2.0
	74	NZA 63 B/4	20.4	1.1	–	–
	72	NZB 63 B/4	21.0	–	–	2.2
	76	NZA 63 B/4	19.4	1.2	–	–
	79	NZB 63 B/4	19.0	–	–	2.3
	85	NZA 63 B/4	17.5	1.2	–	–
	83	NZB 63 B/4	18.1	–	–	2.4
	94	NZA 63 B/4	16.0	1.3	–	–
	92	NZB 63 B/4	16.3	–	–	2.6
	103	NZA 63 B/4	14.5	–	1.4	–
	102	NZB 63 B/4	14.7	–	–	2.7
	112	NZA 63 B/4	13.4	–	1.4	–
	112	NZB 63 B/4	13.4	–	–	2.8
	122	NZA 63 B/4	12.2	–	1.4	–
	123	NZB 63 B/4	12.2	–	–	3.0
	132	NZA 63 B/4	11.4	–	1.5	–
	134	NZB 63 B/4	11.2	–	–	3.7
	150	NZA 63 B/4	10.0	–	–	2.0
	165	NZA 63 B/4	9.1	–	–	2.0
	180	NZA 63 B/4	8.3	–	–	2.0
	200	NZA 63 B/4	7.1	–	–	2.0
	213	NZA 63 B/4	6.9		–	2.1
	232	NZA 63 B/4	6.4	–	–	2.2
	270	NZA 63 B/4	5.5	–	–	2.2

PRODUCT RANGE

REMI GROUP

FLP Motors :

- Frame Size 63 to 160
- Suitable for GAS Group, IIA, IIB
- Approved by ERTL
- Approved by Bureau of Indian Standards (BIS)
- Approved by PESO
- Approved by Directorate General Factory Advice Services & Labour Institute (DGFASLI) Mumbai

STD Motors :

- 0.12 HP to 75 HP
- High Eff Motors as per IS 12615.
- Low Watt loss high grade CRNGO
- German 'VEM' design of stamping
- Special modified wires for 'F' class insulation

Single Phase Motors :

- Without Centrifugal Switch, therefore practically maintenance free
- Compact Capacitor Run Motor. Suitable for high starting torque applications, confirm with REMI

Gear Box :

- Any IEC frame motor can be coupled
- Gear design form 'STEPHAN' Germany
- Gear manufactured as per DIN standard
- 'Block' / 'Unicase' design of gear housing

Geared motors :

- Gears manufactured as per DIN standards
- Gear design from 'STEPHAN' Germany
- 'Block' / 'Unicase' design of gear housing
- High power to weight ratio, as Integral Motors
- High precision machines used only.

Other REMI Products :

- Stainless Steel Pipes, Tubes
- Domestic Fans
- Industrial agitators
- Lab Instruments / Stirrers
- Blood Banking Equipments

REMI ELEKTROTECHNIK LIMITED

Corporate office :
Remi House 11, Cama Industrial Estate,
Goregaon (East), Mumbai - 400 063.
- Tel.: 022-40589888 • Fax : 022 - 26850888
- E-mail : motors@remigroup.com

Works :
Survey No. 65/1, Naik Pada, Waliv Village,
Taluka : Vasai (E), Dist.:Palghar - 401208.
- Tel.: +91 8446013182 to 85
- E-mail : rei_works@remigroup.com

SALES AND SERVICE : REMI SALES & ENGINEERING LTD.

AHMEDABAD : 18A/19A, M R Estate , Kanchan Pharma ni Gali, Nr. Aslali Bypass , Aslali-382427
Dist. Ahmedabad, Gujarat
Tel. 02718-297978 / 90330 93950
Fax : 079-2646 4081, E-mail : motorsahmd@remigroup.com

BANGALORE : 8/1, 3rd Cross, Shamanna Garden,
Adugodi Post, Bangalore - 560030
Tel.: 080-2222 4423.
Email : motorsbang@remigroup.com

CHENNAI : Post Box 3705, 59, Anna Salai,
Chennai : 600 002.
Tel.: 044-2815 8622 / 2854 6356 / 3295 1155
Fax : 044-2841 1952. E-mail : motorschennai@remigroup.com

GOA : S-4, 2nd Floor, Vergincar Empressa, Opp. Saraswat Co-op.Bank, Margao, Goa - 403 601. Tel.: 07767855223
E-mail: jyotendra_nayak@yahoo.com

SECUNDERABAD : Plot No.21 & 22, Meena Arcade,
A-2, Moti Valley, Goyal Co-operative Housing Society,
Tirumalgherry, Secunderabad – 500 015.
Telangana State, India. Tel.: 040-27846682 / 27846683
E-mail: motorshyd@remigroup.com

INDORE : G-1, Royal Regency, Plot No. 377,
Goyal Nagar, Madhavrao Sindhiya Square,
Ring Road, Near Bank of Baroda,
Tel.: +91 7314932606, E-mail : indore@remigroup.com

KANPUR : 112/1-C, 1st Floor, Benajhabar Road,
Swaroop Nagar, Kanpur - 208 002.
Tel.: 0512-2551660, E-mail : remisale@gmail.com

KOCHI : House No. 70/1750, Link Park Colony,
Pottakuzhi Road, Pachalam, Kochi.
Tel.: 0484-2401361, E-mail : kochi@remigroup.com

KOLKATA : Bando House, 29, Ganesh Chandra Avenue,
Kolkata - 700 013. West Bengal.
Tel: 033-2211 6367 / 82320 50245 / 82320 67745.
E-mail : motorskolkata@remigroup.com

NAGPUR : Saraf Court, Dhantoli,
Nagpur : 440 012.
Tel : 0712-2522 575 / 2543 077, Fax : 0712-2548 156
E-mail : remisalesngp@gmail.com

NEW DELHI : No. B-25, 2nd Floor, 'B' Block,
Community Center, Janakpuri, New Delhi - 110058
Tel. No. 011-49728300 Ext. 27
E-mail : motorsdelhi@remigroup.com

REMI 'NZ' SERIES GEARED MOTOR RATING CHART

MOTOR k.W (H.P.)	OUTPUT R.P.M.	GEARED MOTOR FRAME SIZE	OUTPUT TORQUE (Nm)	SERVICE FACTOR AGMA I	AGMA II	AGMA III
0.18 (0.25)	317	NZA 63 B/4	4.7	–	–	2.4
	360	NZA 63 B/4	4.1	–	–	2.4
0.25 (0.33)	1.4	NZ62 80 B/8	1540.0	1.1	–	–
	1.5	NZ73 80 B/8	1403.0	–	1.6	–
	3.4	NZ30 71 A/4	622.0	1.0	–	–
	3.3	NZ40 71 A/4	638.0	–	1.4	–
	4.5	NZ30 71 A/4	467.0	1.3	–	–
	4.4	NZ40 71 A/4	475.0	–	1.7	–
	5.3	NZ2B 71 A/4	405.0	1.1	–	–
	5.1	NZ40 71 A/4	410.0	–	1.8	–
	7.8	NZ2B 71 A/4	274.0	1.3	–	–
	7.4	NZ30 71 A/4	283.0	–	1.8	–
	7.4	NZ40 71 A/4	279.0	–	–	2.4
	8.8	NZ2B 71 A/4	243.0	1.3	–	–
	8.2	NZ30 71 A/4	255.0	–	1.8	–
	8.4	NZ40 71 A/4	247.0	–	–	2.4
	10	NZ2B 71 A/4	204.0	–	1.5	–
	10	NZ30 71 A/4	204.0	–	–	3.0
	17	NZO 80 B/8	132.0	1.3	–	–
	16	NZ2 80 B/8	138.0	–	–	3.3
	20	NZO 80 A/6F	112.0	–	1.5	–
	20	NZ2 80 A/6F	112.0	–	–	3.9
	26	NZB 80 A/6F	87.0	1.0	–	–
	26	NZ0 80 A/6F	87.0	–	–	2.0
	31	NZB 71 A/4	72.0	1.0	–	–
	31	NZ0 71 A/4	72.0	–	–	2.3
	35	NZB 71 A/4	62.0	1.0	–	–
	35	NZ0 71 A/4	62.0	–	–	2.5
	40	NZB 71 A/4	55.0	1.2	–	–
	40	NZ0 71 A/4	55.0	–	–	2.7
	45	NZB 71 A/4	49.0	1.2	–	–
	45	NZ0 71 A/4	49.0	–	–	2.9
	50	NZB 71 A/4	44.0	1.2	–	–
	50	NZ0 71 A/4	44.0	–	–	3.2
	54	NZB 71 A/4	41.4	–	1.4	–
	54	NZ0 71 A/4	41.4	–	–	3.4
	64	NZA 71 A/4	34.7	1.0	–	–
	61	NZB 71 A/4	36.6	–	1.5	–
	61	NZ0 71 A/4	36.6	–	–	3.5
	71	NZA 71 A/4	31.2	1.0	–	–
	68	NZB 71 A/4	32.9	–	1.5	–
	68	NZ0 71 A/4	32.9	–	–	3.6
	78	NZA 71 A/4	28.5	1.0	–	–
	76	NZB 71 A/4	29.3	–	1.6	–
	76	NZ0 71 A/4	29.3	–	–	3.8
	82	NZA 71 A/4	27.0	1.0	–	–
	84	NZB 71 A/4	26.6	–	1.7	–
	86	NZ0 71 A/4	25.6	–	–	4.3
	90	NZA 71 A/4	24.6	1.0	–	–
	88	NZB 71 A/4	25.4	–	1.8	–
	99	NZA 71 A/4	22.3	1.0	–	–
	97	NZB 71 A/4	23.0	–	–	2.0
	108	NZA 71 A/4	20.5	1.0	–	–
	107	NZB 71 A/4	20.7	–	–	2.0
	118	NZA 71 A/4	18.8	1.0	–	–
	118	NZB 71 A/4	18.8	–	–	2.1
	129	NZA 71 A/4	17.2	1.1	–	–
	129	NZB 71 A/4	17.2	–	–	2.2
	139	NZA 71 A/4	16.0	1.1	–	–
	142	NZB 71 A/4	15.6	–	–	2.7

MOTOR k.W (H.P.)	OUTPUT R.P.M.	GEARED MOTOR FRAME SIZE	OUTPUT TORQUE (Nm)	SERVICE FACTOR AGMA I	AGMA II	AGMA III
0.25 (0.33)	153	NZA 71 A/4	14.0	1.3	–	–
	153	NZB 71 A/4	14.0	–	–	2.9
	169	NZA 71 A/4	12.7	–	1.4	–
	171	NZB 71 A/4	12.6	–	–	2.9
	185	NZA 71 A/4	11.7	–	1.4	–
	188	NZB 71 A/4	11.4	–	–	3.1
	202	NZA 71 A/4	10.6	–	1.5	–
	205	NZB 71 A/4	10.4	–	–	3.2
	219	NZA 71 A/4	9.8	–	1.5	–
	226	NZB 71 A/4	9.5	–	–	3.2
	238	NZA 71 A/4	9.8	–	1.6	–
	247	NZB 71 A/4	8.7	–	–	3.4
	278	NZA 71 A/4	7.7	–	1.7	–
	267	NZB 71 A/4	8.1	–	–	3.4
	290	NZB 71 A/4	7.4	–	–	3.5
	325	NZA 71 A/4	6.7	–	1.7	–
	`342	NZB 71 A/4	6.4	–	–	3.8
	371	NZA 71 A/4	5.6	–	1.8	–
	393	NZB 71 A/4	5.4	–	–	3.9
0.37 (0.50)	1.5	NZ73 90 B/8	2138.0	1.1	–	–
	3.3	NZ40 71 B/4	971.0	1.0	–	–
	3.3	NZ62 80 A/6	971.0	–	1.7	–
	4.6	NZ30 71 B/4	696.0	1.0	–	–
	4.5	NZ40 71 B/4	706.0	–	1.4	–
	5.2	NZ30 71 B/4	514.0	1.0	–	–
	5.2	NZ40 71 B/4	514.0	–	1.4	–
	7.4	NZ30 71 B/4	426.0	1.2	–	–
	7.5	NZ40 71 B/4	422.0	–	1.6	–
	8.8	NZ2B 71 B/4	365.0	1.0	–	–
	8.4	NZ40 71 B/4	327.0	–	1.6	–
	10	NZ2B 71 B/4	309.0	1.0	–	–
	10	NZ30 71 B/4	309.0	–	1.9	–
	10	NZ40 71 B/4	309.0	–	–	2.7
	17	Nz0 90 B/8	196.0	1.0	–	–
	16	NZ2 90 B/8	204.0	–	–	2.2
	20	NZ0 80 A/6	167.0	1.0	–	–
	20	NZ2 80 A/6	167.0	–	–	2.7
	26	NZ0 80 A/6	128.0	1.3	–	–
	26	NZ1 80 A/6	128.0	–	1.8	–
	25	NZ2 80 A/6	132.0	–	–	3.4
	31	NZ0 71 B/4	106.0	–	1.6	–
	31	NZ1 80 A/6	106.0	–	–	2.2
	35	NZ0 71 B/4	94.0	–	1.7	–
	40	NZB 71 B/4	82.0	1.0	–	–
	40	NZ0 71 B/4	82.0	–	1.8	–
	40	NZ1 71 B/4	82.0	–	–	2.9
	45	NZB 71 B/4	73.0	1.0	–	–
	45	NZ0 71 B/4	73.0	–	1.9	–
	46	NZ1 71 B/4	70.0	–	–	3.1
	51	NZB 71 B/4	65.0	1.0	–	–
	51	NZ0 71 B/4	65.0	–	–	2.2
	55	NZB 71 B/4	60.7	1.0	–	–
	54	NZ0 71 B/4	61.0	–	–	2.3
	62	NZB 71 B/4	53.8	1.0	–	–
	61	NZ0 71 B/4	54.0	–	–	2.4
	69	NZB 71 B/4	48.0	1.0	–	–
	68	NZ0 71 B/4	48.5	–	–	2.5
	76	NZB 71 B/4	43.8	1.1	–	–
	76	NZ0 71 B/4	43.8	–	–	2.6
	88	NZB 71 B/4	38.0	1.3	–	–

REMI

REMI 'NZ' SERIES GEARED MOTOR RATING CHART

MOTOR k.W (H.P.)	OUTPUT R.P.M.	GEARED MOTOR FRAME SIZE	OUTPUT TORQUE (Nm)	SERVICE FACTOR AGMA I	AGMA II	AGMA III
0.37 (0.50)	87	NZ0 71 B/4	38.2	–	–	2.6
	98	NZB 71 B/4	34.0	1.3	–	–
	97	NZ0 71 B/4	34.2	–	–	3.0
	108	NZB 71 B/4	30.9	–	1.4	–
	108	NZ0 71 B/4	30.9	–	–	3.2
	117	NZA 71 B/4	30.0	1.0	–	–
	119	NZB 71 B/4	28.0	–	1.4	–
	119	NZ0 71 B/4	28.0	–	–	3.4
	130	NZA 71 B/4	25.6	1.0	–	–
	130	NZB 71 B/4	25.6	–	1.5	–
	140	NZA 71 B/4	23.7	1.0	–	–
	143	NZB 71 B/4	22.8	–	1.8	–
	159	NZA 71 B/4	21.0	1.0	–	–
	159	NZB 71 B/4	21.0	–	–	2.0
	175	NZA 71 B/4	19.0	1.0	–	–
	177	NZB 71 B/4	18.9	–	–	2.0
	191	NZA 71 B/4	17.5	1.0	–	–
	195	NZB 71 B/4	17.2	–	–	2.1
	209	NZA 71 B/4	15.9	1.0	–	–
	214	NZB 71 B/4	15.5	–	–	2.2
	227	NZA 71 B/4	14.6	1.0	–	–
	234	NZB 71 B/4	14.1	–	–	2.2
	246	NZA 71 B/4	13.5	1.1	–	–
	256	NZB 71 B/4	13.0	–	–	2.3
	277	NZB 71 B/4	12.0	-	–	2.3
	288	NZA 71 B/4	11.5	1.1	–	–
	300	NZB 71 B/4	11.0	–	–	2.4
	335	NZA 71 B/4	9.9	1.1	–	–
	350	NZB 71 B/4	9.5	–	–	2.6
	379	NZA 71 B/4	8.5	1.1	–	–
	400	NZB 71 B/4	8.0	–	–	2.6
0.55 (0.75)	3.4	NZ62 80 A/4	1393.0	1.1	–	–
	3.5	NZ73 80 A/4	1334.0	–	1.6	–
	4.5	NZ40 80 A/4	1069.0	1.0	–	–
	4.6	NZ62 80 A/4	1030.0	–	1.4	–
	4.7	NZ73 80 A/4	991.0	–	–	2.1
	5.2	NZ40 80 A/4	930.0	1.0	–	–
	5.0	NZ62 80 A/4	947.0	–	1.7	–
	5.3	NZ73 80 A/4	873.0	–	–	2.6
	7.5	NZ30 80 A/4	638.0	1.0	–	–
	7.4	NZ62 80 A/4	637.0	–	1.8	–
	7.6	NZ73 80 A/4	608.0	–	–	2.8
	8.4	NZ30 80 A/4	576.0	1.0	–	–
	8.3	NZ62 80 A/4	569.0	–	1.8	–
	8.4	NZ73 80 A/4	549.0	–	–	2.8
	10	NZ30 80 A/4	460.0	1.3	–	–
	10	NZ40 80 A/4	460.0	–	1.8	–
	10	NZ62 80 A/4	460.0	–	–	3.0
	16	NZ2 90 C/8	325.0	–	1.5	–
	16	NZ3 90 C/8	325.0	–	–	2.1
	20	NZ2 80 B/6	270.0	–	1.8	–
	20	NZ3 80 B/6	270.0	–	–	2.8
	26	NZ0 80 B/6	202.0	1.0	–	–
	26	NZ1 80 B/6	202.0	–	1.4	–
	25	NZ2 80 B/6	212.0	–	–	2.3
	31	NZ0 80 A/4	169.0	1.0	–	–
	30	NZ2 80 A/4	174.0	–	–	2.7
	36	NZ0 80 A/4	146.0	1.2	–	–
	34	NZ2 80 A/4	154.0	–	–	2.9
	41	NZ0 80 A/4	127.0	1.3	–	

MOTOR k.W (H.P.)	OUTPUT R.P.M.	GEARED MOTOR FRAME SIZE	OUTPUT TORQUE (Nm)	SERVICE FACTOR AGMA I	AGMA II	AGMA III
0.55 (0.75)	41	NZ1 80A/4	127.0	–	1.9	–
	39	NZ2 80A/4	136.0	–	–	3.2
	46	NZ0 80A/4	114.0	1.3	–	–
	47	NZ1 80A/4	112.0	–	–	2.1
	52	NZ0 80A/4	101.0	–	1.4	–
	53	NZ1 80A/4	99.0	–	–	2.3
	55	NZ0 80A/4	95.6	–	1.6	–
	60	NZ1 80A/4	87.6	–	–	2.4
	63	NZB 80A/4	83.3	1.0	–	–
	62	NZ0 80A/4	85.0	–	1.6	–
	63	NZ1 80A/4	83.3	–	–	2.5
	70	NZB 80A/4	75.0	1.0	–	–
	70	NZ0 80A/4	75.0	–	1.7	–
	72	NZ1 80A/4	73.0	–	–	2.6
	78	NZB 80A/4	64.5	1.0	–	–
	78	NZ0 80A/4	64.5	–	1.8	–
	81	NZ1 80A/4	65.0	–	–	2.8
	90	NZB 80A/4	58.0	1.0	–	–
	89	NZ0 80A/4	59.1	–	1.9	–
	92	NZ1 80A/4	57.2	–	–	3.1
	100	NZB 80A/4	52.5	1.0	–	–
	99	NZ0 80A/4	53.0	–	–	2.1
	110	NZB 80A/4	47.7	1.0	–	–
	110	NZ0 80A/4	47.7	–	–	2.1
	121	NZB 80A/4	43.4	1.1	–	–
	121	NZ0 80A/4	43.4	–	–	2.3
	145	NZB 80A/4	36.3	1.2	–	–
	141	NZ0 80A/4	37.2	–	–	2.8
	162	NZB 80A/4	32.3	1.3	–	–
	157	NZ0 80A/4	33.4	–	–	2.9
	179	NZB 80A/4	29.3	1.3	–	–
	174	NZ0 80A/4	30.2	–	–	3.0
	198	NZB 80A/4	26.5	–	1.4	–
	193	NZ0 80A/4	27.0	–	–	3.1
	217	NZB 80A/4	24.2	–	1.4	–
	216	NZ0 80A/4	24.3	–	–	3.5
	237	NZB 80A/4	22.0	–	1.5	–
	259	NZB 80A/4	20.3	–	1.5	–
	256	NZ0 80A/4	20.5	–	–	3.5
	281	NZB 80A/4	18.7	–	1.6	–
	304	NZB 80A/4	17.2	–	1.6	–
	306	NZ0 80A/4	17.1	–	–	3.8
	356	NZB 80A/4	14.8	–	1.7	–
	360	NZ0 80A/4	14.5	–	–	4.0
	415	NZB 80A/4	12.6	–	1.8	–
	428	NZ0 80A/4	12.2	–	–	4.2
0.75 (1.0)	3.5	NZ73 90 B/6	1854.0	1.1	–	–
	3.4	NZ84 90 B/6	1923.0	–	1.4	–
	4.6	NZ62 80 A/4T	1422.0	1.0	–	–
	4.7	NZ73 80 A/4T	1373.0	–	1.6	–
	5.0	NZ62 80 A/4T	1305.0	1.3	–	–
	5.3	NZ73 80 A/4T	1216.0	–	1.9	–
	7.6	NZ40 80 A/4T	877.0	1.0	–	–
	7.4	NZ62 80 A/4T	883.0	–	1.4	–
	7.6	NZ73 80 A/4T	843.0	–	–	2.1
	8.6	NZ40 80 A/4T	775.0	1.0	–	–
	8.3	NZ62 80 A/4T	785.0	–	1.5	–
	8.4	NZ73 80 A/4T	765.0	–	–	2.2
	10	NZ30 80 A/4T	637.0	1.0	–	–
	10	NZ40 80 A/4T	637.0	–	1.4	–

REMI 'NZ' SERIES GEARED MOTOR RATING CHART

MOTOR k.W (H.P.)	OUTPUT R.P.M.	GEARED MOTOR FRAME SIZE	OUTPUT TORQUE (Nm)	SERVICE FACTOR AGMA I	AGMA II	AGMA III
0.75 (1.0)	10	Nz73 80 A/4T	637.0	–	–	3.4
	17	NZ2 100 C/8	417.0	1.1	–	–
	17	NZ3 100 C/8	417.0	–	1.6	–
	20	NZ2 90 B/6	366.0	1.3	–	–
	20	NZ3 90 B/6	366.0	–	1.9	–
	20	NZ4 90 B/6	366.0	–	–	2.7
	27	NZ1 90 B/6	269.0	1.0	–	–
	27	NZ2 90 B/6	269.0	–	1.5	–
	28	NZ3 90 B/6	256.0	–	–	2.6
	31	NZ0 80 A/4T	231.0	1.0	–	–
	30	NZ2 80 A/4T	240.0	–	1.9	–
	30	NZ3 80 A/4T	240.0	–	–	3.0
	36	NZO 80 A/4T	199.0	1.0	–	–
	38	NZ2 80 A/4T	188.0	–	–	2.3
	41	NZ0 80 A/4T	174.0	1.0	–	–
	41	NZ1 80 A/4T	174.0	–	1.4	–
	42	NZ2 80 A/4T	168.0	–	–	2.4
	46	NZ0 80 A/4T	156.0	1.0	–	–
	47	NZ1 80 A/4T	152.0	–	1.4	–
	46	NZ2 80 A/4T	156.0	–	–	2.6
	51	NZ0 80 A/4T	140.0	1.0	–	–
	53	NZ1 80 A/4T	134.0	–	1.5	–
	51	NZ2 80 A/4T	140.0	–	–	2.8
	60	NZ1 80 A/4T	118.0	–	1.6	–
	57	NZ2 80 A/4T	125.0	–	–	2.9
	62	NZ0 80 A/4T	115.0	1.1	–	–
	63	NZ1 80 A/4T	113.0	–	1.7	–
	64	NZ2 80 A/4T	112.0	–	–	3.1
	69	NZ0 80 A/4T	100.0	1.2	–	–
	72	NZ1 80 A/4T	99.0	–	1.8	–
	73	NZ2 80 A/4T	98.0	–	–	3.5
	77	NZ0 80 A/4T	93.0	1.2	–	–
	81	NZ1 80 A/4T	88.0	–	1.9	–
	81	NZ2 80 A/4T	88.0	–	–	3.7
	88	NZ0 80 A/4T	81.0	–	1.4	–
	92	NZ1 80 A/4T	78.0	–	–	2.1
	100	NZB 80 A/4T	71.0	1.0	–	–
	99	NZ0 80 A/4T	72.0	–	1.4	–
	103	NZ1 80 A/4T	69.0	–	–	2.2
	110	NZB 80 A/4T	65.0	1.0	–	–
	109	NZ0 80 A/4T	64.0	–	1.4	–
	115	NZ1 80 A/4T	62.0	–	–	2.3
	121	NZB 80 A/4T	59.0	1.0	–	–
	121	NZ0 80 A/4T	59.0	–	1.6	–
	127	NZ1 80 A/4T	56.0	–	–	2.4
	145	NZB 80 A/4T	49.0	1.0	–	–
	140	NZ0 80 A/4T	51.0	–	1.9	–
	143	NZ1 80 A/4T	50.0	–	–	3.0
	162	NZB 80 A/4T	44.0	1.0	–	–
	155	NZ0 80 A/4T	46.0	–	1.9	–
	162	NZ1 80 A/4T	44.0	–	–	3.2
	179	NZB 80 A/4T	40.0	1.0	–	–
	173	NZ0 80 A/4T	41.0	–	–	2.1
	198	NZB 80 A/4T	36.0	1.1	–	–
	192	NZ0 80 A/4T	37.0	–	–	2.1
	217	NZB 80 A/4T	33.0	1.1	–	–
	214	NZ0 80 A/4T	33.4	–	–	2.4
	259	NZB 80 A/4T	27.6	1.1	–	–
	255	NZ0 80 A/4T	28.0	–	–	2.4
	304	NZB 80 A/4T	23.5	1.2	–	–
	305	NZ0 80 A/4T	23.4	–	–	2.6

MOTOR k.W (H.P.)	OUTPUT R.P.M.	GEARED MOTOR FRAME SIZE	OUTPUT TORQUE (Nm)	SERVICE FACTOR AGMA I	AGMA II	AGMA III
0.75 (1.0)	356	NZB 80A/4T	20.1	1.3	–	–
	358	NZO 80A/4T	20.0	–	–	2.7
	415	NZB 80A/4T	17.2	1.3	–	–
	425	NZ0 80A/4T	16.8	–	–	2.9
				–	–	–
1.1 (1.5)	3.1	NZ84 90 C/6	3120.0	1.0	–	–
	4.8	NZ73 90 B/4	2001.0	1.1	–	–
	4.7	NZ84 90 B/4	2021.0	–	1.5	–
	5.4	NZ73 90 B/4	1776.0	1.3	–	–
	5.3	NZ84 90 B/4	1599.0	–	1.5	–
	7.5	NZ62 90 B/4	1285.0	1.1	–	–
	7.7	NZ73 90 B/4	1246.0	–	1.4	–
	7.6	NZ84 90 B/4	1248.0	–	–	2.0
	8.4	NZ62 90 B/4	1148.0	1.3	–	–
	8.6	NZ73 90 B/4	1118.0	–	1.5	–
	8.4	NZ84 90 B/4	1148.0	–	–	2.1
	10	NZ40 90 B/4	948.0	1.0	–	–
	10	NZ62 90 B/4	948.0	–	1.6	–
	10	NZ73 90 B/4	948.0	–	–	2.3
	17	NZ3 100 D/8	613.0	1.0	–	–
	17	NZ4 100 D/8	613.0	–	1.5	–
	17	NZ6 100 D/8	613.0	–	–	2.8
	20	NZ2 90 C/6	534.0	1.0	–	–
	20	NZ3 90 C/6	534.0	–	1.4	–
	19	NZ6 90 C/6	564.0	–	–	3.2
	25	NZ2 90 C/6	415.0	1.1	–	–
	25	NZ3 90 C/6	415.0	–	1.6	–
	25	NZ4 90 C/6	415.0	–	–	2.4
	30	NZ2 90 B/4	345.0	1.3	–	–
	30	NZ3 90 B/4	345.0	–	1.9	–
	30	NZ4 90 B/4	345.0	–	–	2.5
	34	NZ2 90 B/4	309.0	–	1.5	–
	35	NZ3 90 B/4	300.0	–	–	2.2
	41	NZ1 90 B/4	256.0	1.0	–	–
	39	NZ2 90 B/4	270.0	–	1.6	–
	39	NZ3 90 B/4	270.0	–	–	2.3
	47	NZ1 90 B/4	223.0	1.0	–	–
	46	NZ2 90 B/4	228.0	–	1.8	–
	44	NZ3 90 B/4	239.0	–	–	2.4
	53	NZ1 90 B/4	198.0	1.1	–	–
	52	NZ2 90 B/4	202.0	–	1.9	–
	52	NZ3 90 B/4	202.0	–	–	2.8
	60	NZ1 90 B/4	174.0	1.2	–	–
	58	NZ2 90 B/4	160.0	–	–	2.0
	64	NZ1 90 B/4	164.0	1.3	–	–
	65	NZ2 90 B/4	162.0	–	–	2.2
	70	NZ0 90 B/4	150.0	1.0	–	–
	72	NZ1 90 B/4	145.0	–	1.4	–
	74	NZ2 90 B/4	142.0	–	–	2.5
	78	NZ0 90 B/4	134.0	1.0	–	–
	81	NZ1 90 B/4	129.0	–	1.5	–
	82	NZ2 90 B/4	128.0	–	–	2.6
	89	NZ0 90 B/4	127.0	1.0	–	–
	92	NZ1 90 B/4	115.0	–	1.6	–
	91	NZ2 90 B/4	113.0	–	–	2.7
	99	NZ0 90 B/4	106.0	1.0	–	–
	99	NZ2 90 B/4	106.0	–	–	2.7
	110	NZ0 90 B/4	95.0	1.1	–	–
	104	NZ1 90 B/4	101.0	–	1.7	–
	109	NZ2 90 B/4	96.0	–	–	2.9
	121	NZ0 90 B/4	87.0	1.1	–	–

REMI

REMI 'NZ' SERIES GEARED MOTOR RATING CHART

MOTOR k.W (H.P.)	OUTPUT R.P.M.	GEARED MOTOR FRAME SIZE	OUTPUT TORQUE (Nm)	SERVICE FACTOR AGMA I	AGMA II	AGMA III
1.1 (1.5)	116	NZ1 90 B/4	90.0	–	1.7	–
	119	NZ2 90 B/4	88.0	–	–	2.9
	128	NZ1 90 B/4	82.0	–	1.8	–
	128	NZ2 90 B/4	82.0	–	–	3.1
	141	NZ0 90 B/4	76.0	–	1.4	–
	144	NZ1 90 B/4	73.0	–	–	2.2
	157	NZ0 90 B/4	67.0	–	1.5	–
	163	NZ1 90 B/4	64.0	–	–	2.3
	174	NZ0 90 B/4	60.0	–	1.5	–
	193	NZ0 90 B/4	54.5	–	1.6	–
	183	NZ1 90 B/4	57.5	–	–	2.4
	215	NZ0 90 B/4	48.8	–	1.8	–
	204	NZ1 90 B/4	51.6	–	–	2.5
	228	NZ1 90 B/4	46.0	–	–	2.6
	256	NZ0 90 B/4	41.0	–	1.8	–
	252	NZ1 90 B/4	41.8	–	–	2.7
	306	NZ0 90 B/4	34.3	–	1.9	–
	303	NZ1 90 B/4	34.7	–	–	2.9
	360	NZ0 90 B/4	29.2	–	–	2.0
	366	NZ1 90 B/4	28.7	–	–	3.0
	420	NZ1 90 B/4	25.0	–	–	3.1
	428	NZ0 90 B/4	24.5	1.0	–	–
	435	NZ1 90 B/4	24.1	–	–	3.3
				–		–
1.5 (2.0)	4.7	NZ84 90 B/4T	2805	1.1	–	–
	5.3	NZ84 90 B/4T	2482	1.1	–	–
	7.7	NZ73 90 B/4T	1717	1.1	–	–
	7.5	NZ84 90 B/4T	1746	–	1.5	–
	8.5	NZ73 90 B/4T	1560	1.1	–	–
	8.3	NZ84 90 B/4T	1579	–	1.5	–
	10	NZ62 90 B/4T	1255	1.2	–	–
	10	NZ73 90 B/4T	1255	–	1.8	–
	10	NZ84 90 B/4T	1255	–	–	2.5
	17	NZ4 112 B/8	853	1.1	–	–
	17	NZ7 112 B/8	853	–	–	2.9
	20	NZ3 100 C/6	716	1.0	–	–
	20	NZ4 100 C/6	716	–	1.4	–
	19	NZ6 100 C/6	755	–	–	2.4
	26	NZ3 100 C/6	539	1.2	–	–
	26	NZ4 100 C/6	539	–	1.8	–
	25	NZ6 100 C/6	578	–	–	3.2
	30	NZ2 90 B/4T	470	1.0	–	–
	30	NZ3 90 B/4T	470	–	1.5	–
	30	NZ4 90 B/4T	470	–	–	2.0
	34	NZ2 90 B/4T	416	1.1	–	–
	34	NZ3 90 B/4T	416	–	1.6	–
	35	NZ4 90 B/4T	409	–	–	2.2
	39	NZ2 90 B/4T	366	1.2	–	–
	39	NZ3 90 B/4T	366	–	1.7	–
	40	NZ4 90 B/4T	358	–	–	2.4
	46	NZ2 90 B/4T	311	1.3	–	–
	44	NZ3 90 B/4T	329	–	1.8	–
	45	NZ4 90 B/4T	317	–	–	2.5
	53	NZ1 90 B/4T	270	1.0	–	–
	52	NZ2 90 B/4T	275	–	1.5	–
	52	NZ3 90 B/4T	275	–	–	2.1
	60	NZ1 90 B/4T	238	1.0	–	–
	58	NZ2 90 B/4T	247	–	1.5	–
	58	NZ3 90 B/4T	247	–	–	2.3
	64	NZ1 90 B/4T	223	1.0	–	–
	65	NZ2 90 B/4T	220	–	1.6	–

MOTOR k.W (H.P.)	OUTPUT R.P.M.	GEARED MOTOR FRAME SIZE	OUTPUT TORQUE (Nm)	SERVICE FACTOR AGMA I	AGMA II	AGMA III
1.5 (2.0)	65	NZ3 90 B/4T	220	–	–	2.4
	72	NZ1 90 B/4T	199	1.1	–	–
	74	NZ2 90 B/4T	193	1.8	–	–
	73	NZ3 90 B/4T	190	–	–	2.5
	81	NZ1 90 B/4T	176	1.2	–	–
	82	NZ2 90 B/4T	174	–	1.9	–
	82	NZ3 90 B/4T	174	–	–	2.8
	92	NZ1 90 B/4T	156	1.2	–	–
	91	NZ2 90 B/4T	158	–	1.9	–
	91	NZ3 90 B/4T	158	–	–	2.9
	99	NZ0 90 B/4T	144	1.0	–	–
	99	NZ2 90 B/4T	144	–	1.9	–
	100	NZ3 90 B/4T	145	–	–	3.0
	110	NZ0 90 B/4T	130	1.0	–	–
	104	NZ1 90 B/4T	137	–	1.4	–
	109	NZ2 90 B/4T	131	–	–	2.2
	121	NZ0 90 B/4T	118	1.0	–	–
	116	NZ1 90 B/4T	123	–	1.4	–
	119	NZ2 90 B/4T	120	–	–	2.2
	128	NZ1 90 B/4T	111	–	1.5	–
	127	NZ2 90 B/4T	112	–	–	2.3
	141	NZ0 90 B/4T	101	1.0	–	–
	144	NZ1 90 B/4T	99	–	1.6	–
	141	NZ2 90 B/4T	101	–	–	2.7
	157	NZ0 90 B/4T	91.0	1.1	–	–
	163	NZ1 90 B/4T	87.0	–	1.7	–
	157	NZ2 90 B/4T	91.0	–	–	2.8
	174	NZ0 90 B/4T	82.0	1.1	–	–
	172	NZ2 90 B/4T	83.0	–	–	2.9
	193	NZ0 90 B/4T	73.0	1.2	–	–
	183	NZ1 90 B/4T	87.0	–	1.8	–
	188	NZ2 90 B/4T	76.0	–	–	3.1
	215	NZ0 90 B/4T	66.0	1.3	–	–
	204	NZ1 90 B/4T	70.0	–	1.9	–
	206	NZ2 90 B/4T	69.0	–	–	3.2
	228	NZ1 90 B/4T	62.0	–	1.9	–
	256	NZ0 90 B/4T	56.0	1.3	–	–
	252	NZ1 90 B/4T	57.0	–	–	2.0
	306	NZ0 90 B/4T	46.8	–	1.4	–
	303	NZ1 90 B/4T	47.2	–	–	2.2
	360	NZ0 90 B/4T	39.7	–	1.5	–
	366	NZ1 90 B/4T	39.1	–	–	2.3
	428	NZ0 90 B/4T	33.4	–	1.6	–
	435	NZ1 90 B/4T	32.9	–	–	2.5
2.2 (3.0)	7.6	NZ84 100 B/4	2250	1.0	–	–
	7.1	NZ10 132 A/8	2961	–	–	2.0
	8.4	NZ84 100 B/4	2305	1.1	–	–
	8.1	NZ10 132 A/8	2595	–	–	2.1
	10	NZ73 100 B/4	1815	1.2	–	–
	10	NZ84 100 B/4	1815	–	1.6	–
	16	NZ6 132 A/8	1314	1.3	–	–
	15	NZ7 132 A/8	1402	–	1.9	–
	16	NZ8 132 A/8	1314	–	–	2.7
	22	NZ6 112 B/6	961	–	1.8	–
	20	NZ7 112 B/6	1030	–	–	2.4
	26	NZ4 112 B/6	794	1.1	–	–
	25	NZ6 112 B/6	843	–	–	2.1
	30	NZ3 100 B/4	686	1.0	–	–
	30	NZ4 100 B/4	686	–	1.4	–
	29	NZ6 100 B/4	726	–	–	2.4

REMI 'NZ' SERIES GEARED MOTOR RATING CHART

MOTOR k.W (H.P.)	OUTPUT R.P.M.	GEARED MOTOR FRAME SIZE	OUTPUT TORQUE (Nm)	SERVICE FACTOR AGMA I	AGMA II	AGMA III
2.2 (3.0)	35	NZ3 100 B/4	598	1.1	–	–
	35	NZ4 100 B/4	598	–	1.5	–
	34	NZ6 100 B/4	618	–	–	2.7
	39	NZ3 100 B/4	539	1.2	–	–
	40	NZ4 100 B/4	520	–	1.6	–
	38	NZ6 100 B/4	549	–	–	2.9
	44	NZ3 100 B/4	476	1.2	–	–
	45	NZ4 100 B/4	467	–	1.7	–
	43	NZ6 100 B/4	488	–	–	3.0
	52	NZ2 100 B/4	405	1.0	–	–
	53	NZ3 100 B/4	395	–	1.4	–
	54	NZ4 100 B/4	389	–	–	2.0
	58	NZ2 100 B/4	363	1.0	–	–
	59	NZ3 100 B/4	358	–	1.5	–
	60	NZ4 100 B/4	350	–	–	2.0
	65	NZ2 100 B/4	323	1.1	–	–
	65	NZ3 100 B/4	323	–	1.6	–
	67	NZ4 100 B/4	313	–	–	2.2
	74	NZ2 100 B/4	284	1.2	–	–
	72	NZ3 100 B/4	292	–	1.6	–
	75	NZ4 100 B/4	280	–	–	2.5
	82	NZ1 100 B/4	256	1.0	–	–
	82	NZ2 100 B/4	256	–	1.4	–
	83	NZ3 100 B/4	253	–	–	2.0
	91	NZ2 100 B/4	230	–	1.4	–
	92	NZ3 100 B/4	228	–	–	2.0
	105	NZ1 100 B/4	200	1.0	–	–
	109	NZ2 100 B/4	191	–	1.5	–
	101	NZ3 100 B/4	208	–	–	2.0
	117	NZ1 100 B/4	179	1.1	–	–
	119	NZ2 100 B/4	176	–	1.5	–
	130	NZ1 100 B/4	161	1.2	–	–
	128	NZ2 100 B/4	168	–	1.6	–
	146	NZ1 100 B/4	144	1.2	–	–
	142	NZ2 100 B/4	148	–	1.8	–
	145	NZ3 100 B/4	145	–	–	2.6
	165	NZ1 100 B/4	127	1.3	–	–
	158	NZ2 100 B/4	132	–	1.9	–
	161	NZ3 100 B/4	130	–	–	2.7
	173	NZ2 100 B/4	121	–	1.9	–
	176	NZ3 100 B/4	119	–	–	2.8
	186	NZ1 100 B/4	112	1.3	–	–
	189	NZ2 100 B/4	110	–	–	2.1
	207	NZ1 100 B/4	101	–	1.4	–
	208	NZ2 100 B/4	100	–	–	2.1
	231	NZ1 100 B/4	91.0	–	1.4	–
	255	NZ1 100 B/4	82.0	–	1.5	–
	245	NZ2 100 B/4	85.0	–	–	2.2
	308	NZ1 100 B/4	68.0	–	1.6	–
	340	NZ2 100 B/4	61.8	–	–	2.5
	370	NZ1 100 B/4	56.9	–	1.7	–
	395	NZ2 100 B/4	53.2	–	–	2.5
	441	NZ1 100 B/4	47.6	–	1.8	–
3.7 (5.0)	7.1	NZ10 160 A/8	4980	–	1.5	–
	8.1	NZ10 160 A/8	4365	–	1.6	–
	10	NZ84 112 B/4	3100	1.0	–	–
	10	NZ10 132 A/6	3100	–	–	2.1
	15	NZ7 160 A/8	2350	1.2	–	–
	16	NZ8 160 A/8	2200	–	1.7	–
	22	NZ6 132 A/6	1587	1.1	–	–

MOTOR k.W (H.P.)	OUTPUT R.P.M.	GEARED MOTOR FRAME SIZE	OUTPUT TORQUE (Nm)	SERVICE FACTOR AGMA I	AGMA II	AGMA III
3.7 (5.0)	20	NZ7 132 A/6	1740	–	1.4	–
	21	NZ8 132 A/6	1650	–	–	2.0
	25	NZ6 132 A/6	1385	1.1	–	–
	26	NZ7 132 A/6	1360	–	1.7	–
	27	NZ8 132 A/6	1306	–	–	2.7
	29	NZ6 112 B/4	1215	1.3	–	–
	30	NZ7 112 B/4	1179	–	1.8	–
	35	NZ4 112 B/4	1006	1.0	–	–
	34	NZ6 112 B/4	1100	–	1.6	–
	35	NZ7 112 B/4	1006	–	–	2.4
	40	NZ4 112 B/4	884	1.0	–	–
	38	NZ6 112 B/4	925	–	1.7	–
	39	NZ7 112 B/4	907	–	–	2.6
	45	NZ4 112 B/4	785	1.0	–	–
	43	NZ6 112 B/4	820	–	1.8	–
	44	NZ7 112 B/4	812	–	–	2.6
	50	NZ4 112 B/4	883	1.1	–	–
	48	NZ6 112 B/4	734	–	1.9	–
	48	NZ7 112 B/4	734	–	–	2.8
	60	NZ4 112 B/4	589	1.2	–	–
	58	NZ6 112 B/4	607	–	–	2.1
	68	NZ4 112 B/4	517	1.3	–	–
	65	NZ6 112 B/4	539	–	–	2.4
	75	NZ4 112 B/4	472	1.3	–	–
	72	NZ6 112 B/4	489	–	–	2.5
	84	NZ3 112 B/4	421	1.3	–	–
	86	NZ4 112 B/4	411	–	1.5	–
	82	NZ6 112 B/4	431	–	–	2.6
	92	NZ3 112 B/4	385	1.3	–	–
	95	NZ4 112 B/4	372	–	1.6	–
	92	NZ6 112 B/4	385	–	–	2.8
	101	NZ3 112 B/4	350	1.3	–	–
	106	NZ4 112 B/4	333	–	1.6	–
	101	NZ6 112 B/4	350	–	–	2.9
	111	NZ3 112 B/4	343	–	1.4	–
	112	NZ6 112 B/4	341	–	–	3.0
	122	NZ3 112 B/4	289	–	1.4	–
	122	NZ6 112 B/4	289	–	–	3.2
	128	NZ2 112 B/4	275	1.1	–	–
	132	NZ3 112 B/4	267	–	1.4	–
	135	NZ4 112 B/4	260	–	–	2.1
	142	NZ2 112 B/4	240	1.1	–	–
	145	NZ3 112 B/4	243	–	1.5	–
	158	NZ2 112 B/4	221	1.1	–	–
	161	NZ3 112 B/4	219	–	1.6	–
	152	NZ4 112 B/4	232	–	–	2.2
	173	NZ2 112 B/4	204	1.2	–	–
	176	NZ3 112 B/4	200	–	1.7	–
	169	NZ4 112 B/4	209	–	–	2.2
	189	NZ2 112 B/4	187	1.3	–	–
	193	NZ3 112 B/4	183	–	1.7	–
	187	NZ4 112 B/4	189	–	–	2.5
	208	NZ2 112 B/4	169	1.3	–	–
	211	NZ3 112 B/4	167	–	1.8	–
	206	NZ4 112 B/4	171	–	–	2.6
	245	NZ2 112 B/4	144	1.3	–	–
	250	NZ3 112 B/4	141	–	1.9	–
	248	NZ4 112 B/4	142	–	–	2.8
	290	NZ2 112 B/4	121	–	1.4	–
	293	NZ3 112 B/4	120	–	–	2.1
	340	NZ2 112 B/4	104	–	1.5	–

REMI

REMI 'NZ' SERIES GEARED MOTOR RATING CHART

MOTOR k.W (H.P.)	OUTPUT R.P.M.	GEARED MOTOR FRAME SIZE	OUTPUT TORQUE (Nm)	SERVICE FACTOR AGMA I	AGMA II	AGMA III
3.7 (5.0)	343	NZ3 112 B/4	103	–	–	2.1
	395	NZ2 112 B/4	88.8	–	1.5	–
	399	NZ3 112 B/4	87.8	–	–	2.4
						–
5.5 (7.5)	7.1	NZ10 160 B/8	7402	1.1	–	–
	8.1	NZ10 160 B/8	6488	1.2	–	–
	11	NZ10 132 B/6T	4866	–	1.5	–
	16	NZ8 160 B/8	3224	1.0	–	–
	16	NZ10 132 A/4	3224	–	1.4	–
	21	NZ8 132 B/6T	2462	–	1.4	–
	20	NZ10 132 A/4	2589	–	–	2.0
	26	NZ7 132 B/6T	2020	1.2	–	–
	27	NZ8 132 B/6T	1942	–	1.8	–
	26	NZ10 132 A/4	2020	–	–	2.3
	29	NZ6 132 A/4	1805	1.0	–	–
	30	NZ7 132 A/4	1716	–	1.5	–
	32	NZ8 132 A/4	1638	–	–	2.2
	34	NZ6 132 A/4	1540	1.1	–	–
	35	NZ7 132 A/4	1520	–	1.6	–
	36	NZ8 132 A/4	1461	–	–	2.3
	38	NZ6 132 A/4	1383	1.2	–	–
	39	NZ7 132 A/4	1344	–	1.7	–
	40	NZ8 132 A/4	1314	–	–	2.4
	43	NZ6 132 A/4	1216	1.2	–	–
	44	NZ7 132 A/4	1206	–	1.8	–
	45	NZ8 132 A/4	1177	–	–	2.5
	48	NZ6 132 A/4	1089	1.3	–	–
	48	NZ7 132 A/4	1089	–	1.9	–
	49	NZ8 132 A/4	1089	–	–	2.7
	58	NZ6 132 A/4	902	–	1.5	–
	58	NZ7 132 A/4	902	–	–	2.2
	65	NZ6 132 A/4	809	–	1.6	–
	65	NZ7 132 A/4	809	–	–	2.3
	72	NZ6 132 A/4	730	–	1.6	–
	71	NZ7 132 A/4	739	–	–	2.4
	80	NZ6 132 A/4	657	–	1.7	–
	78	NZ7 132 A/4	674	–	–	2.5
	86	NZ4 132 A/4	611	1.0	–	–
	82	NZ6 132 A/4	641	–	1.8	–
	82	NZ7 132 A/4	641	–	–	2.7
	95	NZ4 132 A/4	553	1.1	–	–
	91	NZ6 132 A/4	577	–	1.9	–
	91	NZ7 132 A/4	577	–	–	2.8
	106	NZ4 132 A/4	495	1.2	–	–
	101	NZ6 132 A/4	520	–	1.9	–
	99	NZ7 132 A/4	531	–	–	2.9
	111	NZ6 132 A/4	473	–	1.9	–
	110	NZ7 132 A/4	477	–	–	3.1
	117	NZ4 132 A/4	448	1.2	–	–
	121	NZ6 132 A/4	424	–	–	2.2
	135	NZ4 132 A/4	389	1.3	–	–
	143	NZ6 132 A/4	386	–	–	2.6
	161	NZ3 132 A/4	326	1.2	–	–
	150	NZ4 132 A/4	350	–	1.5	–
	159	NZ6 132 A/4	330	–	–	2.8
	176	NZ3 132 A/4	297	1.2	–	–
	167	NZ4 132 A/4	315	–	1.5	–
	176	NZ6 132 A/4	297	–	–	2.9
	193	NZ3 132 A/4	272	1.2	–	–
	186	NZ4 132 A/4	282	–	1.6	–
	193	NZ6 132 A/4	272	–	–	3.0

MOTOR k.W (H.P.)	OUTPUT R.P.M.	GEARED MOTOR FRAME SIZE	OUTPUT TORQUE (Nm)	SERVICE FACTOR AGMA I	AGMA II	AGMA III
5.5 (7.5)	211	Nz3 132 A/4	249	1.2	–	–
	204	NZ4 132 A/4	258	–	1.7	–
	212	NZ6 132 A/4	247	–	–	3.1
	250	NZ3 132 A/4	210	1.3	–	–
	246	NZ4 132 A/4	213	–	1.8	–
	253	NZ6 132 A/4	208	–	–	3.3
	293	NZ3 132 A/4	179	1.3	–	–
	292	NZ4 132 A/4	180	–	1.9	–
	298	NZ6 132 A/4	176	–	–	3.4
	343	NZ3 132 A/4	153	–	1.4	–
	345	NZ4 132 A/4	152	–	–	2.1
	399	NZ3 132 A/4	131	–	1.5	–
	410	NZ4 132 A/4	127	–	–	2.1
7.5 (10.0)	11	NZ10 160B/6	6635	1.1	–	–
	16	NZ10 132 B/4R	4396	–	1.7	–
	21	NZ8 160 B/6	3345	1.0	–	–
	20	NZ10 132 B/4R	3530	–	–	2.0
	26	NZ7 160 B/6	2756	1.0	–	–
	27	NZ8 160B/6	2648	–	1.4	–
	26	NZ10 132 B/46	2756	–	–	2.3
	30	NZ7 132 B/4R	2344	1.1	–	–
	32	NZ8 132 B/4R	2236	–	1.6	–
	31	NZ10 132 B/4R	2275	–	–	2.4
	35	NZ7 132 B/4R	2070	1.2	–	–
	36	NZ8 132 B/4R	1991	–	1.7	–
	38	NZ6 132 B/4R	1883	1.0	–	–
	39	NZ7 132 B/4R	1843	–	1.4	–
	40	NZ8 132 B/4R	1785	–	–	2.0
	43	NZ6 132 B/4R	1667	1.0	–	–
	44	NZ7 132 B/4R	1648	–	1.4	–
	45	NZ8 132 B/4R	1608	–	–	2.0
	48	NZ6 132 B/4R	1491	1.0	–	–
	48	NZ7 132 B/4R	1491	–	1.4	–
	49	NZ8 132 B/4R	1461	–	–	2.0
	58	NZ6 132 B/4R	1236	1.1	–	–
	58	NZ7 132 B/4R	1236	–	1.6	–
	60	NZ8 132 B/4R	1197	–	–	2.3
	65	NZ6 132 B/4R	1098	1.1	–	–
	65	NZ7 132 B/4R	1098	–	1.7	–
	66	NZ8 132 B/4R	1088	–	–	2.5
	72	NZ6 132 B/4R	990	1.2	–	–
	71	NZ7 132 B/4R	1010	–	1.8	–
	72	NZ8 132 B/4R	990	–	–	2.6
	80	NZ6 132 B/4R	896	1.3	–	–
	78	NZ7 132 B/4R	919	–	1.9	–
	76	NZ8 132 B/4R	943	–	–	2.6
	82	NZ6 132 B/4R	873	1.3	–	–
	82	NZ7 132 B/4R	873	–	1.9	–
	84	NZ8 132 B/4R	853	–	–	2.8
	92	NZ6 132 B/4R	779	1.3	–	–
	91	NZ7 132 B/4R	787	–	1.9	–
	92	NZ8 132 B/4R	779	–	–	3.0
	95	NZ4 132 B/4R	754	1.0	–	–
	101	NZ6 132 B/4R	709	–	1.5	–
	99	NZ7 132 B/4R	724	–	–	2.2
	106	NZ4 132 B/4R	675	1.0	–	–
	112	NZ6 132 B/4R	639	–	1.6	–
	110	NZ7 132 B/4R	651	–	–	2.3
	117	NZ4 132 B/4R	612	1.0	–	–
	122	NZ6 132 B/4R	586	–	1.6	–

REMI 'NZ' SERIES GEARED MOTOR RATING CHART

MOTOR k.W (H.P.)	OUTPUT R.P.M.	GEARED MOTOR FRAME SIZE	OUTPUT TORQUE (Nm)	SERVICE FACTOR AGMA I	AGMA II	AGMA III
7.5 (10.0)	119	Nz7 132 B/4R	601	–	–	2.4
	135	NZ4 132 B/4R	530	1.0	–	–
	129	NZ7 132 B/4R	555	–	–	2.8
	145	NZ3 132 B/4R	494	1.0	–	–
	150	NZ4 132 B/4R	476	–	1.4	–
	144	NZ6 132 B/4R	497	–	–	2.0
	161	NZ3 132 B/4R	445	1.0	–	–
	167	NZ4 132 B/4R	428	–	1.4	–
	160	NZ6 132 B/4R	447	–	–	2.1
	176	NZ3 132 B/4R	407	1.0	–	–
	186	NZ4 132 B/4R	385	–	1.4	–
	177	NZ6 132 B/4R	405	–	–	2.2
	193	NZ3 132 B/4R	370	1.0	–	–
	195	NZ6 132 B/4R	366	–	–	2.3
	211	NZ3 132 B/4R	339	1.0	–	–
	204	NZ4 132 B/4R	351	–	1.4	–
	214	NZ6 132 B/4R	334	–	–	2.4
	250	NZ3 132 B/4R	286	1.0	–	–
	246	NZ4 132 B/4R	291	–	1.5	–
	255	NZ6 132 B/4R	280	–	–	2.5
	293	NZ3 132 B/4R	244	1.0	–	–
	292	NZ4 132 B/4R	245	–	1.6	–
	300	NZ6 132 B/4R	238	–	–	2.6
	343	NZ3 132 B/4R	209	1.0	–	–
	345	NZ4 132 B/4R	207	–	1.6	–
	356	NZ6 132 B/4R	201	–	–	2.8
	399	NZ3 132 B/4R	179	1.0	–	–
	410	NZ4 132 B/4R	174	–	1.6	–
	418	NZ6 132 B/4R	170	–	–	3.0
					–	
11.0 (15.0)	16	NZ10 160 B/4	6370	1.2	–	–
	20	NZ10 160 B/4	5102	–	1.4	–
	27	NZ8 160 C/6	3894	1.0	–	–
	26	NZ10 160 B/4	4027	–	1.7	–
	32	NZ9 160 B/4	3286	1.1	–	–
	32	NZ10 160 B/4	3286	–	–	2.2
	36	NZ8 160 B/4	2923	1.1	–	–
	37	NZ10 160 B/4	2841	–	–	2.5
	40	NZ8 160 B/4	2600	1.2	–	–
	40	NZ10 160 B/4	2600	–	–	2.7
	45	NZ8 160 B/4	2334	1.2	–	–
	45	NZ10 160 B/4	2334	–	–	2.8
	49	NZ7 160 B/4	2168	1.0	–	–
	50	NZ8 160 B/4	2118	–	1.4	–
	49	NZ10 160 B/4	2168	–	–	3.0
	58	NZ7 160 B/4	1814	1.1	–	–
	60	NZ8 160 B/4	1667	–	1.5	–
	60	NZ10 160 B/4	1667	–	–	3.2
	65	NZ7 160 B/4	1618	1.2	–	–
	66	NZ8 160 B/4	1590	–	1.6	–
	66	NZ10 160 B/4	1590	–	–	3.4
	72	NZ7 160 B/4	1461	1.2	–	–
	73	NZ8 160 B/4	1442	–	1.7	–
	79	NZ7 160 B/4	1334	1.3	–	–
	76	NZ8 160 B/4	1383	–	1.7	–
	83	NZ6 160 B/4	1265	1.0	–	–
	83	NZ7 160 B/4	1265	–	1.4	–
	84	NZ8 160 B/4	1245	–	–	2.0
	92	NZ6 160 B/4	1137	1.0	–	–
	91	NZ7 160 B/4	1157	–	1.4	–
	92	NZ8 160 B/4	1137	–	–	2.0

MOTOR k.W (H.P.)	OUTPUT R.P.M.	GEARED MOTOR FRAME SIZE	OUTPUT TORQUE (Nm)	SERVICE FACTOR AGMA I	AGMA II	AGMA III
11.0 (15.0)	102	Nz6 160 B/4	1030	1.0	–	–
	100	NZ7 160 B/4	1049	–	1.5	–
	102	NZ8 160 B/4	1030	–	–	2.1
	112	NZ6 160 B/4	938	1.0	–	–
	111	NZ7 160 B/4	946	–	1.5	–
	110	NZ8 160 B/4	956	–	–	2.2
	123	NZ6 160 B/4	854	1.1	–	–
	120	NZ7 160 B/4	877	–	1.6	–
	119	NZ8 160 B/4	883	–	–	2.5
	130	NZ7 160 B/4	809	–	1.9	–
	132	NZ8 160 B/4	797	–	–	2.6
	145	NZ6 160 B/4	726	1.3	–	–
	144	NZ7 160 B/4	730	–	1.9	–
	145	NZ8 160 B/4	726	–	–	2.7
	161	NZ6 160 B/4	653	1.3	–	–
	158	NZ7 160 B/4	665	–	1.9	–
	159	NZ8 160 B/4	662	–	–	2.8
	178	NZ6 160 B/4	591	1.3	–	–
	174	NZ7 160 B/4	605	–	1.9	–
	175	NZ8 160 B/4	601	–	–	2.9
	196	NZ6 160 B/4	536	–	1.5	–
	191	NZ7 160 B/4	551	–	–	2.2
	215	NZ6 160 B/4	488	–	1.6	–
	209	NZ7 160 B/4	503	–	–	2.3
	257	NZ6 160 B/4	409	–	1.7	–
	247	NZ7 160 B/4	425	–	–	2.4
	302	NZ6 160 B/4	348	–	1.8	–
	290	NZ7 160 B/4	363	–	–	2.6
	358	NZ6 160 B/4	294	–	1.9	–
	341	NZ7 160 B/4	308	–	–	2.7
	420	NZ6 160 B/4	250	–	–	2.0
15.0 (20.0)	20	NZ10 160 C/4	7060	1.0	–	–
	25	NZ10 160 C/4	5555	1.3	–	–
	32	NZ10 160 C/4	4550	–	1.6	–
	40	NZ10 160 C/4	3583	–	–	2.0
	45	NZ8 160 C/4	3188	1.0	–	–
	44	NZ10 160 C/4	3257	–	–	2.4
	49	NZ8 160 C/4	2893	1.0	–	–
	48	NZ10 160 C/4	2955	–	–	2.5
	55	NZ8 160 C/4	2600	1.0	–	–
	54	NZ10 160 C/4	2654	–	–	2.6
	61	NZ8 160 C/4	2344	1.1	–	–
	60	NZ10 160 C/4	2389	–	–	2.7
	67	NZ8 160 C/4	2138	1.2	–	–
	65	NZ10 160 C/4	2205	–	–	2.8
	73	NZ8 160 C/4	1962	1.3	–	–
	71	NZ10 160 C/4	2019	–	–	2.9
	79	NZ7 160 C/4	1814	1.0	–	–
	77	NZ8 160 C/4	1863	–	1.4	–
	78	NZ10 160 C/4	1837	–	–	3.0
	83	NZ7 160 C/4	1726	1.0	–	–
	85	NZ8 160 C/4	1687	–	1.4	–
	91	NZ7 160 C/4	1569	1.0	–	–
	93	NZ8 160 C/4	1540	–	1.5	–
	100	NZ7 160 C/4	1432	1.1	–	–
	102	NZ8 160 C/4	1402	–	1.5	–
	111	NZ7 160 C/4	1290	1.1	–	–
	111	NZ8 160 C/4	1290		1.7	–
	130	NZ7 160 C/4	1101		1.4	–
	133	NZ8 160 C/4	1074		–	2.0

REMI

REMI 'NZ' SERIES GEARED MOTOR RATING CHART

MOTOR k.W (H.P.)	OUTPUT R.P.M.	GEARED MOTOR FRAME SIZE	OUTPUT TORQUE (Nm)	SERVICE FACTOR AGMA I	AGMA II	AGMA III
15.0 (20.0)	146	Nz6 160 C/4	982	1.0	–	–
	145	NZ7 160 C/4	985	–	1.5	–
	146	NZ8 160 C/4	982	–	–	2.1
	162	NZ6 160 C/4	884	1.0	–	–
	159	NZ7 160 C/4	902	–	1.5	–
	160	NZ8 160 C/4	895	–	–	2.1
	179	NZ6 160 C/4	800	1.1	–	–
	175	NZ7 160 C/4	819	–	1.6	–
	176	NZ8 160 C/4	814	–	–	2.2
	197	NZ6 160 C/4	727	1.1	–	–
	192	NZ7 160 C/4	745	–	1.7	–
	192	NZ8 160 C/4	745	–	–	2.2
	216	NZ6 160 C/4	663	1.2	–	–
	210	NZ7 160 C/4	681	–	1.7	–
	226	NZ8 160 C/4	633	–	–	2.5
	258	NZ6 160 C/4	555	1.2	–	–
	248	NZ7 160 C/4	576	–	1.8	–
	264	NZ8 160 C/4	542	–	–	2.6
	304	NZ6 160 C/4	470	1.3	–	–
	292	NZ7 160 C/4	490	–	1.9	–
	304	NZ8 160 C/4	470	–	–	2.7
	344	NZ7 160 B/4	416	–	–	2.0
	398	NZ7 160 B/4	360	–	–	2.1
18.5 (25.0)	26	NZ10 180 B/4	6851	1.0	–	–
	31	NZ10 180 B/4	5612	1.3	–	–
	36	NZ10 180 B/4	4843	–	1.6	–
	40	NZ10 180 B/4	4419	–	1.6	–
	44	NZ10 180 B/4	4017	–	–	2.0
	48	NZ10 180 B/4	3645	–	–	2.0
	54	NZ10 180 B/4	3273	–	–	2.4
	60	NZ10 180 B/4	2946	–	–	2.4
	65	NZ10 180 B/4	2719	–	–	2.4
	73	NZ8 180 B/4	2423	1.0	–	–
	77	NZ8 180 B/4	2295	1.0	–	–
	85	NZ8 180 B/4	2079	1.1	–	–
	93	NZ8 180 B/4	1901	1.2	–	–
	111	NZ7 180 B/4	1589	1.0	–	–
	111	NZ8 180 B/4	1589	–	1.4	–
	120	NZ7 180 B/4	1471	1.0	–	–
	120	NZ8 180 B/4	1471	–	1.5	–
	130	NZ7 180 B/4	1329	1.1	–	–
	133	NZ8 180 B/4	1300	–	1.5	–
	145	NZ7 180 B/4	1216	1.2	–	–
	146	NZ8 180 B/4	1209	–	1.6	–
	159	NZ7 180 B/4	1111	1.2	–	–
	160	NZ8 180 B/4	1103	–	1.7	–
	175	NZ7 180 B/4	1010	1.3	–	–
	176	NZ8 180 B/4	1003	–	1.7	–
	192	NZ7 180 B/4	919	1.3	–	–
	192	NZ8 180 B/4	919	–	1.8	–
	210	NZ7 180 B/4	841	–	1.4	–
	226	NZ8 180 B/4	781	–	–	2.0
	248	NZ7 180 B/4	712	–	1.5	–
	264	NZ8 180 B/4	669	–	–	2.1
	292	NZ7 180 B/4	604	–	1.6	–
	308	NZ8 180 B/4	573	–	–	2.2
	344	NZ7 180 B/4	513	–	1.6	–
	358	NZ8 180 B/4	493	–	–	2.3
	398	NZ7 180 B/4	443	–	1.7	–
	412	NZ8 180 B/4	428	–	–	2.3

MOTOR k.W (H.P.)	OUTPUT R.P.M.	GEARED MOTOR FRAME SIZE	OUTPUT TORQUE (Nm)	SERVICE FACTOR AGMA I	AGMA II	AGMA III
22.0 (30.0)	31	Nz10 180 C/4	6673	1.1	–	–
	36	NZ10 180 C/4	5759	1.3	–	–
	40	NZ10 180 C/4	5255	–	1.4	–
	44	NZ10 180 C/4	4777	–	1.7	–
	48	NZ10 180 C/4	4334	–	1.7	–
	54	NZ10 180 C/4	3893	–	–	2.0
	60	NZ10 180 C/4	3503	–	–	2.1
	67	NZ8 180 C/4	3139	1.0	–	–
	65	NZ10 180 C/4	3234	–	–	2.1
	73	NZ8 180 C/4	2874	1.0	–	–
	71	NZ10 180 C/4	2961	–	–	2.2
	77	NZ8 180 C/4	2727	1.0	–	
	78	NZ10 180 C/4	2695	–	–	2.2
	102	NZ8 180 C/4	2060	1.0	–	–
	101	NZ10 180 C/4	2081	–	–	2.5
	120	NZ8 180 C/4	1751	1.2	–	–
	124	NZ10 180 C/4	1695	–	–	3.0
	130	NZ7 180 C/4	1618	1.0	–	–
	133	NZ8 180 C/4	1579	–	1.4	–
	145	NZ7 180 C/4	1442	1.0	–	–
	146	NZ8 180 C/4	1437	–	1.4	–
	159	NZ7 180 C/4	1322	1.0	–	–
	160	NZ8 180 C/4	1314	–	1.4	–
	175	NZ7 180 C/4	1196	1.1	–	–
	176	NZ8 180 C/4	1191	–	1.4	–
	192	NZ7 180 C/4	1093	1.1	–	–
	192	NZ8 180 C/4	1093	–	1.5	–
	210	NZ7 180 C/4	1000	1.1	–	–
	226	NZ8 180 C/4	930	–	1.6	–
	248	NZ7 180 C/4	847	1.2	–	–
	264	NZ8 180 C/4	794	–	1.8	–
	292	NZ7 180 C/4	720	1.3	–	–
	308	NZ8 180 C/4	681	–	1.8	–
	344	NZ7 180 C/4	611	1.3	–	–
	358	NZ8 180 C/4	586	–	1.9	–
	398	NZ7 180 C/4	527	–	1.4	–
	412	NZ8 180 C/4	510	–	–	2.0
30.0 (40.0)	40	NZ10 200 B/4	7078	1.0	–	–
	45	NZ10 200 B/4	6442	1.2	–	–
	49	NZ10 200 B/4	5850	1.2	–	–
	55	NZ10 200 B/4	5212	–	1.5	–
	60	NZ10 200 B/4	4777	–	1.5	–
	66	NZ10 200 B/4	4343	–	1.5	–
	72	NZ10 200 B/4	3981	–	1.6	–
	79	NZ10 200 B/4	3628	–	1.6	–
	86	NZ10 200 B/4	3333	–	–	2.1
	94	NZ10 200 B/4	3049	–	–	2.1
	102	NZ10 200 B/4	2810	–	–	2.2
	111	NZ8 200 B/4	2580	1.0	–	–
	111	NZ10 200 B/4	2580	–	–	2.2
	120	NZ8 200 B/4	2383	1.0	–	–
	126	NZ10 200 B/4	2275	–	–	2.5
	147	NZ8 200 B/4	1952	1.0	–	–
	161	NZ8 200 B/4	1775	1.0	–	–
	177	NZ8 200 B/4	1618	1.0	–	–
	193	NZ8 200 B/4	1481	1.1	–	–
	227	NZ8 200 B/4	1265	1.2	–	–
	265	NZ8 200 B/4	1079	1.3	–	–
	308	NZ8 200 B/4	931	1.3	–	–
	359	NZ8 200 B/4	798	–	1.4	–
	414	NZ8 200 B/4	692	–	1.4	–

Dimensions of Two Stage Foot Mounted Geared Motors

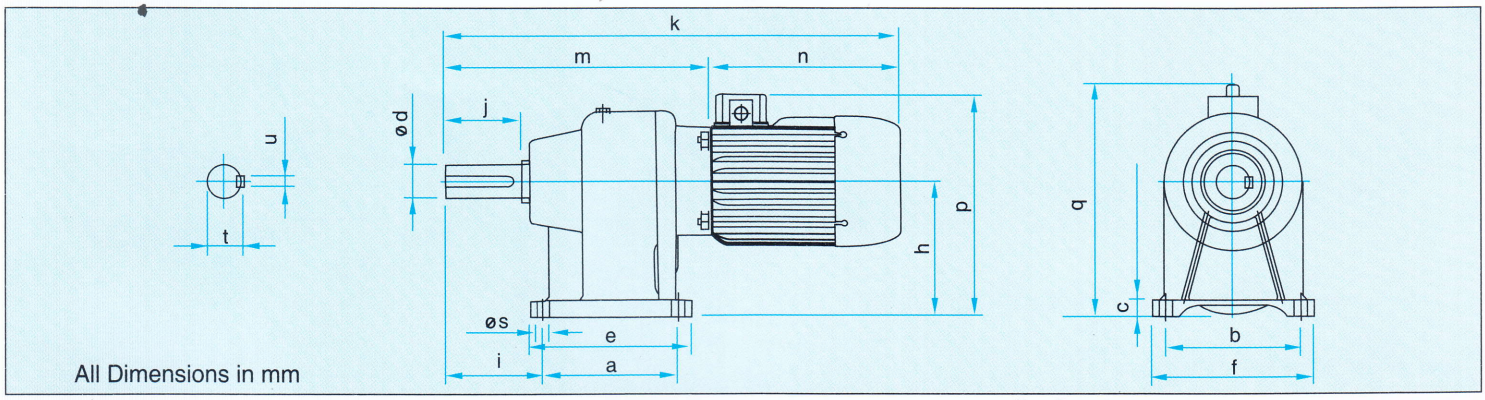

All Dimensions in mm

G.M.	SIZE	a	b	c	d	e	f	h	l	j	k	m	n	p	q	s	t	u
NZA	63A	80	90	12	14	102	112	80	43	30	315	165	150	165	130	9.5	16	5
NZA	63B										329		164					
NZA	71A										327	170	157	180				
NZA	71B										338		168					
NZB	63A	90	100	14	19	114	124	100	54	40	338	188	150	188	156	9.5	21.5	6
NZB	63B										352		164					
NZB	71A										351	194	157	200				
NZB	71B										362		168					
NZB	71C										372		178					
NZB	80A										401	207	194	208				
NZ0	63B	120	120	20	24	144	144	120	67	50	400	236	164	205	238	11.5	27	8
NZ0	71A										393		157					
NZ0	71B										411	243	168	220				
NZ0	71C										421		178					
NZ0	80A										441	247	194	228				
NZ0	80B										461		214					
NZ0	90B										482	252	230	234				
NZ1	71B	150	150	20	34	180	180	140	90	70	448	280	168	240	270	14.0	37	10
NZ1	80A										491	297	194	248				
NZ1	80B										511		214					
NZ1	90B										532	302	230	254				
NZ1	100B										556	304	252	263				
NZ2	80A	160	160	20	38	192	192	160	102	80	493	299	194	263	300	14.0	41	12
NZ2	80B										513		214					
NZ2	90B										530	300	230	275				
NZ2	90C										555		255					
NZ2	100B										558	306	252	283				
NZ2	100C										576		270					
NZ2	112B										631	326	305	294				
NZ3	80A	180	180	22	44	216	216	180	112	90	526	332	194	288	330	18.0	47.5	14
NZ3	80B										546		214					
NZ3	90B										566	336	230	294				
NZ3	90C										591		255					
NZ3	100B										588	336	252	303				
NZ3	100C										606		270					
NZ3	100D										638		302					
NZ3	112B										666	361	305	314				
NZ3	132A										700	387	313	362				
NZ3	132B										740		353					
NZ4	90B	200	200	30	48	240	240	200	124	100	595	365	230	315	360	18.0	51.5	14
NZ4	90C										628		255					
NZ4	100B										622	370	252	323				
NZ4	100C										640		270					
NZ4	100D										671		301					
NZ4	112B										681	376	305	364				
NZ4	132A										728	413	315	382				
NZ4	132B										766		353					
NZ6	100B	240	240	30	58	290	290	240	150	120	694	442	252	363	420	18.0	62	18
NZ6	100D										744		302					
NZ6	112B										757	452	305	404				
NZ6	132A										775	460	315	422				
NZ6	132B										813		353					
NZ6	160B										886	476	410	450				
NZ6	160C										936		460					
NZ7	112B	280	280	35	68	335	335	280	171	140	826	516	305	444	480	20.0	73	20
NZ7	132A										843	528	315	462				
NZ7	132B										881		353					
NZ7	160A										886	508	378	490				
NZ7	160B										918		410					
NZ7	160C										968		460					
NZ7	180B										1041	557	484	510				
NZ7	180C										1106		549					
NZ8	132A	320	320	40	78	380	380	320	205	160	906	591	315	502	540	22.0	83	22
NZ8	132B										944		353					
NZ8	160A										944	566	378	530				
NZ8	160B										976		410					
NZ8	160C										1026		460					
NZ8	180B										1064	580	484	550				
NZ8	180C										1129		549					
NZ8	200B										1135	618	517	570				

REMI

Dimensions of Two Stage Flange Mounted Geared Motors

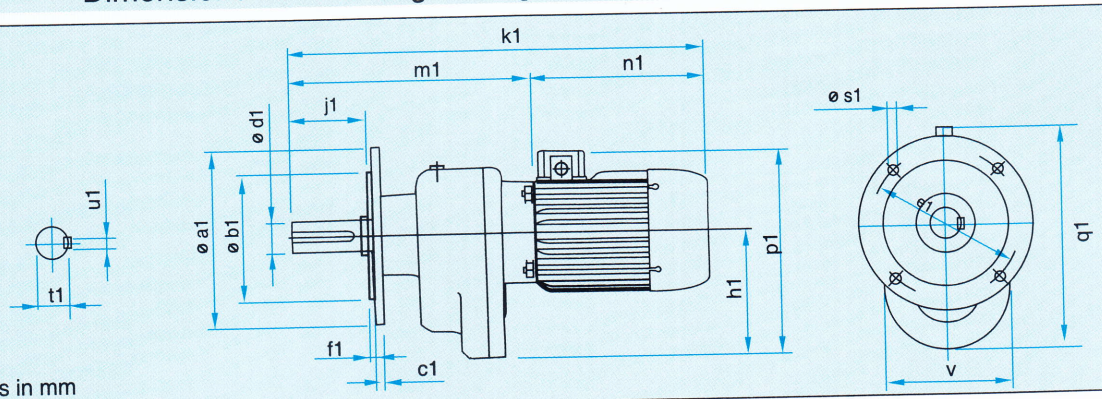

All Dimensions in mm

G.M.	SIZE	d1	h1	j1	k1	m1	n1	p1	q1	t1	u1	v	a1	b1	c1	e1	f1	a1
NZA	63A	14	79	32	315	165	150	165	140	16	5	90	120	80	8	100	3	7
NZA	63B				329		164											
NZA	71A				327	170	157	180										
NZA	71B				338		168											
NZB	63A	19	98	42	338	188	150	188	169	21.5	6	106	140	95	10	115	3	9.5
NZB	63B				352		164											
NZB	71A				351	194	157	200										
NZB	71B				362		168											
NZB	71C				372		178											
NZB	80A				401	207	194	208										
NZ0	63B	24	113	55	400	236	164	205	238	27	8	120	160	110	10	130	3.5	9.5
NZ0	71A				393	243	157	220										
NZ0	71B				411		168											
NZ0	71C				421		178											
NZ0	80A				441	247	194	228										
NZ0	80B				461		214											
NZ0	90B				482	252	230	234										
NZ1	71B	34	135	75	448	280	168	240	270	37	10	145	160	110	12	130	3.5	9.5
NZ1	80A				491	297	194	248										
NZ1	80B				511		214											
NZ1	90B				532	302	230	254										
NZ1	100B				556	304	252	263										
NZ2	80A	38	152	86.5	493	299	194	263	300	41	12	163	200	130	12	165	3.5	11.5
NZ2	80B				513		214											
NZ2	90B				530	300	230	275										
NZ2	90C				555		255											
NZ2	100B				558	306	252	283										
NZ2	100C				576		270											
NZ2	112B				631	326	305	294										
NZ3	80A	44	177	94	526	332	194	288	330	47.5	14	185	250	180	12	215	4	14
NZ3	80B				546		214											
NZ3	90B				566	336	230	294										
NZ3	90C				591		255											
NZ3	100B				588	336	252	303										
NZ3	100C				606		270											
NZ3	100D				638		302											
NZ3	112B				666	361	305	314										
NZ3	132A				700	387	313	362										
NZ3	132B				740		353											
NZ4	90B	48	195	104	595	365	230	315	360	51.5	14	203	300	230	16	256	4	14
NZ4	90C				628		255											
NZ4	100B				622	370	252	323										
NZ4	100C				640		270											
NZ4	100D				671		301											
NZ4	112B				681	376	305	364										
NZ4	132A				728	413	315	382										
NZ4	132B				766		353											
NZ6	100B	58	230	125	694	442	252	363	420	62	18	243	350	250	20	300	4	18
NZ6	100D				744		302											
NZ6	112B				757	452	305	404										
NZ6	132A				775	460	315	422										
NZ6	132B				813		353											
NZ6	160B				886	476	410	450										
NZ6	160C				936		460											
NZ7	112B	68	270	144	826	516	305	444	480	73	20	284	350	250	24	300	5	18
NZ7	132A				843	528	315	462										
NZ7	132B				881		353											
NZ7	160A				886	508	378	490										
NZ7	160B				918		410											
NZ7	160C				968		460											
NZ7	180B				1041	557	484	510										
NZ7	180C				1106		549											
NZ8	132A	78	308	167	906	591	315	502	540	83	22	323	350	250	24	300	5	18
NZ8	132B				944		353											
NZ8	160A				944	566	378	530										
NZ8	160B				976		410											
NZ8	160C				1026		460											
NZ8	180B				1064	580	484	550										
NZ8	180C				1129		549											
NZ8	200B				1135	618	517	570										

Dimensions of Three Stage Foot Mounted Geared Motors

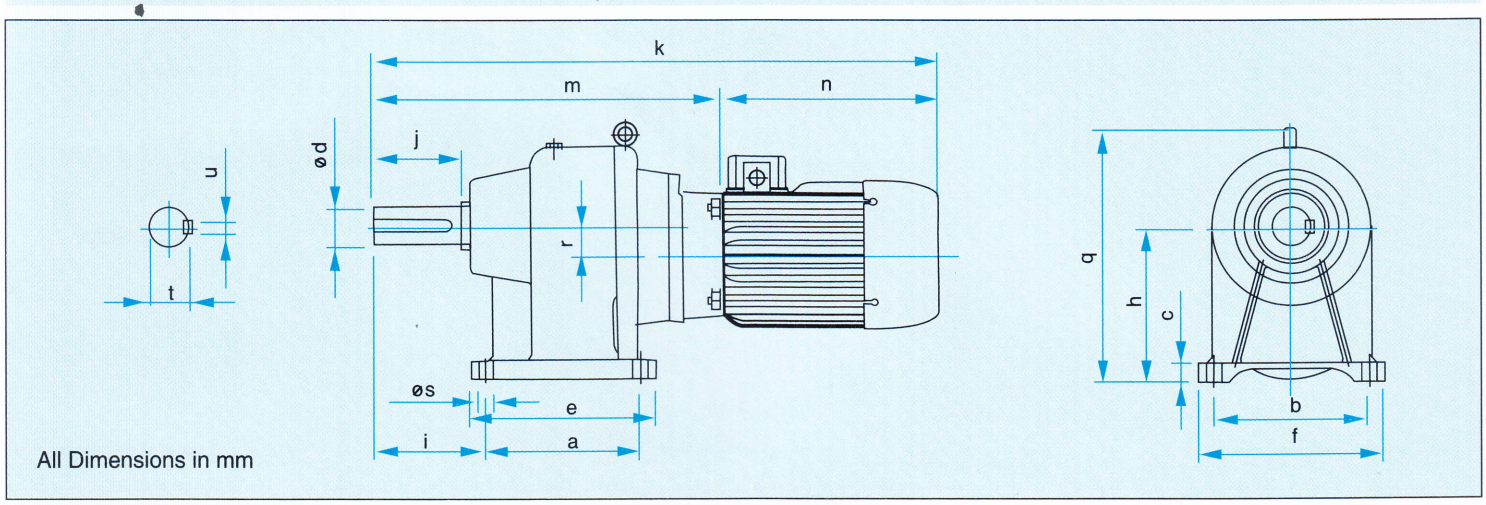

All Dimensions in mm

G.M.	SIZE	a	b	c	d	e	f	h	l	j	k	m	n	p	q	s	t	u
NZ0A	63A	120	120	20	24	144	144	120	67	50	439	289	150	238	37.2	11.5	27	8
NZ0A	63B										453		164					
NZ2B	63A	160	160	20	38	192	192	160	102	80	518	368	150	300	44.8	14	41	12
NZ2B	63B										532		164					
NZ2B	71A										531	374	157					
NZ2B	71B										542		168					
NZ30	63A	180	180	22	44	216	216	180	112	90	558	408	150	330	52.2	18	47.5	14
NZ30	63B										572		164					
NZ30	71A										572	415	157					
NZ30	71B										583		168					
NZ30	80A										613	419	194					
NZ40	63A	200	200	30	48	240	240	200	124	100	593	443	150	360	52.2	18	51.5	14
NZ40	63B										607		164					
NZ40	71A										607	450	157					
NZ40	71B										618		168					
NZ40	80A										648	454	194					
NZ40	90B										689	459	230					
NZ62	80A	240	240	30	58	290	290	240	150	120	706	512	194	420	70.3	18	62	18
NZ62	80B										726		214					
NZ62	90B										743	513	230					
NZ73	80A	280	280	35	68	335	335	280	171	140	796	602	194	480	84.5	20	73	20
NZ73	80B										816		214					
NZ73	90B										836	606	230					
NZ73	100B										858		252					
NZ84	90B	320	320	40	78	380	380	320	205	160	916	686	230	540	93.8	22	83	22
NZ84	90C										941		255					
NZ84	100B										944	692	252					
NZ84	112B										1002	697	305					

Dimensions of 'NZ10' Three Stage Foot Mounted Gear Motors

FRAME SIZE	g	k	o	w
NZ10 132A	257	1054	415	216
NZ10 132B	257	1092	453	216
NZ10 160A	310	1107	468	260
NZ10 160B	310	1139	500	260
NZ10 160C	310	1189	550	260
NZ10 180B	347	1231	592	295
NZ10 180C	347	1296	657	295
NZ10 200B	387	1250	611	330

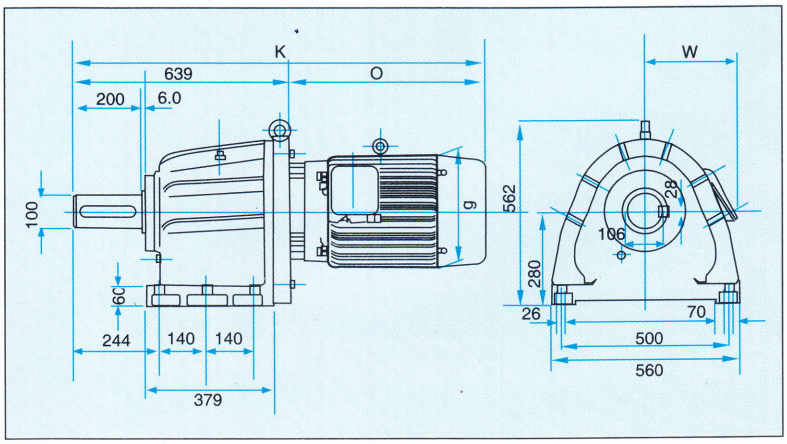

REMI

Dimensions of Three Stage Flange Mounted Geared Motors

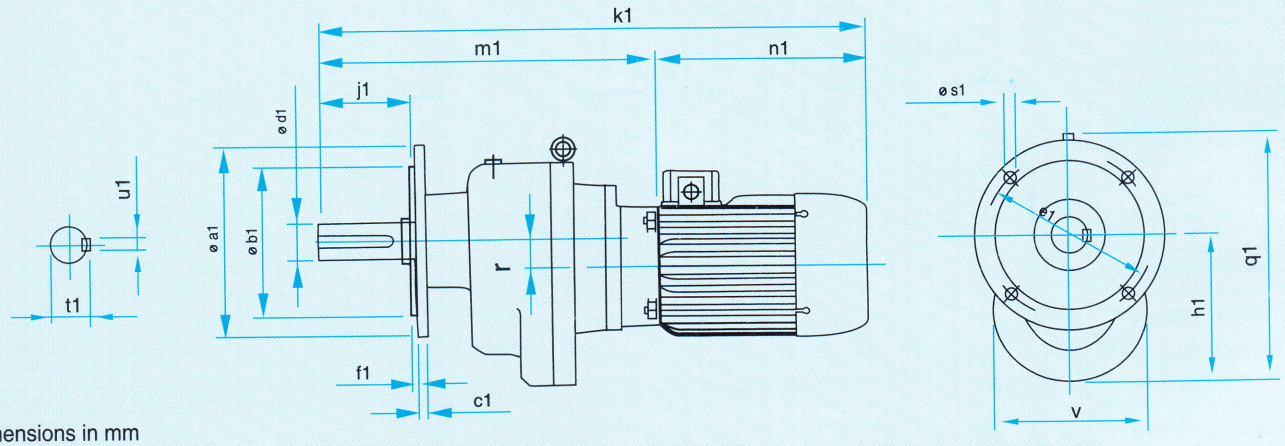

All Dimensions in mm

G.M.	SIZE	d1	h1	j1	k1	m1	n1	q1	t1	u1	v	a1	b1	c1	e1	f1	s1	r
NZ0A	63A	24	112	55	439	289	150	192	27	8	120	160	110	10	130	3.5	9.5	37.2
NZ0A	63B				453		164											
NZ2B	63A	38	152	86.5	518	368	150	252	41	12	163	200	130	12	165	3.5	11.5	44.8
NZ2B	63B				532		164											
NZ2B	71A				531	374	157											
NZ2B	71B				542		168											
NZ30	63A	44	177	94	558	408	150	302	47.5	14	185	250	180	12	215	4	14	52.2
NZ30	63B				572		164											
NZ30	71A				572	415	157											
NZ30	71B				583		168											
NZ30	80A				613	419	194											
NZ40	63A	48	195	104	593	443	150	345	51.5	14	203	300	230	16	265	4	14	52.2
NZ40	63B				607		164											
NZ40	71A				607	450	157											
NZ40	71B				618		168											
NZ40	80A				648	454	194											
NZ40	90B				689	459	230											
NZ62	80A	58	230	125	706	512	194	405	62	18	243	350	250	20	300	4	18	70.3
NZ62	80B				726		214											
NZ62	90B				743	513	230											
NZ73	80A	68	270	144	796	602	194	445	73	20	284	350	250	24	300	5	18	84.5
NZ73	80B				816		214											
NZ73	90B				836	606	230											
NZ73	100B				858		252											
NZ84	90B	78	308	167	916	686	230	483	83	22	323	350	250	24	300	5	18	93.8
NZ84	90C				941		255											
NZ84	100B				944	692	252											
NZ84	112B				1002	697	305											

Dimensions of 'NZ10' Three stage flange mounted gear motor

FRAME SIZE	g	k	o	w
NZ10 132A	257	1054	415	216
NZ10 132B	257	1092	453	216
NZ10 160A	310	1107	468	260
NZ10 160B	310	1139	500	260
NZ10 160C	310	1189	550	260
NZ10 180B	347	1231	592	295
NZ10 180C	347	1296	657	295
NZ10 200B	387	1250	611	330

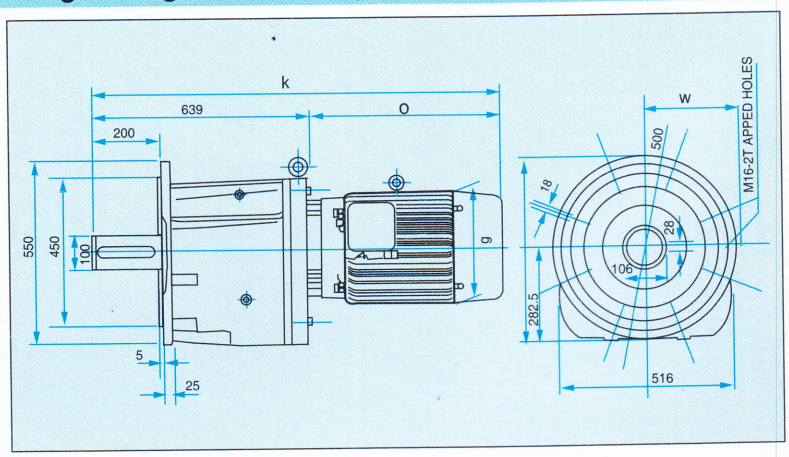

SPARES :

Ensure to give complete details of data available on the name plate when ordering the spares.
To ensure correct supplies give correct nomenclature of the part and the part number shown in illustrations, below.

NZ Series Two Stage Geared Motor Sectional View

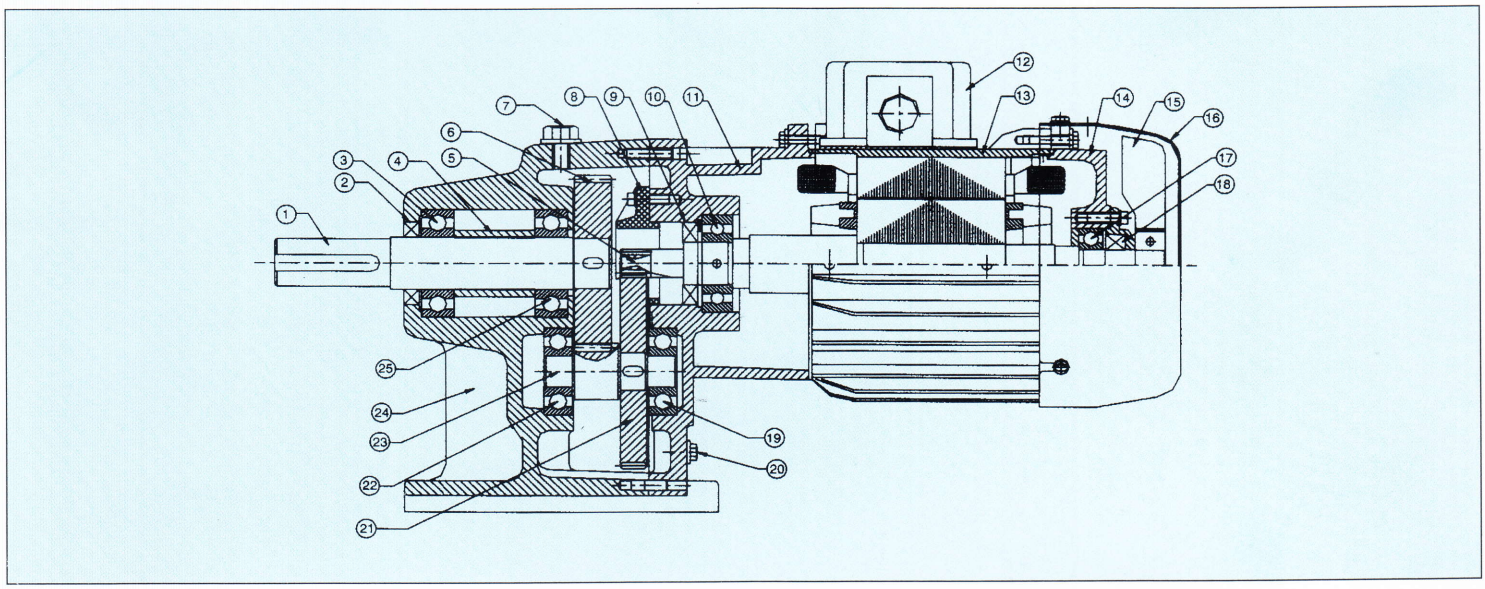

1. OUT PUT SHAFT
2. OIL SEAL
3. BEARING
4. SPACER SLEEVE
5. TOOTHED SHAFT/PINION WHEEL
6. OUT PUT WHEEL
7. BREATHER PLUG
8. SUPPORTING COLLAR
9. OIL SEAL
10. BEARING
11. COVER
12. TERMINAL BOX
13. CASING
14. END SHIELD
15. FAN BLADE
16. FAN COWL
17. BEARING
18. OIL SEAL
19. BEARING
20. DRAIN PLUG
21. INTERMEDIATE WHEEL
22. BEARING
23. INTERMEDIATE SHAFT
24. FOOT (FLANGE) MOUNTED HOUSING
25. BALL BEARING

NZ Series Three Stage Geared Motor Sectional View

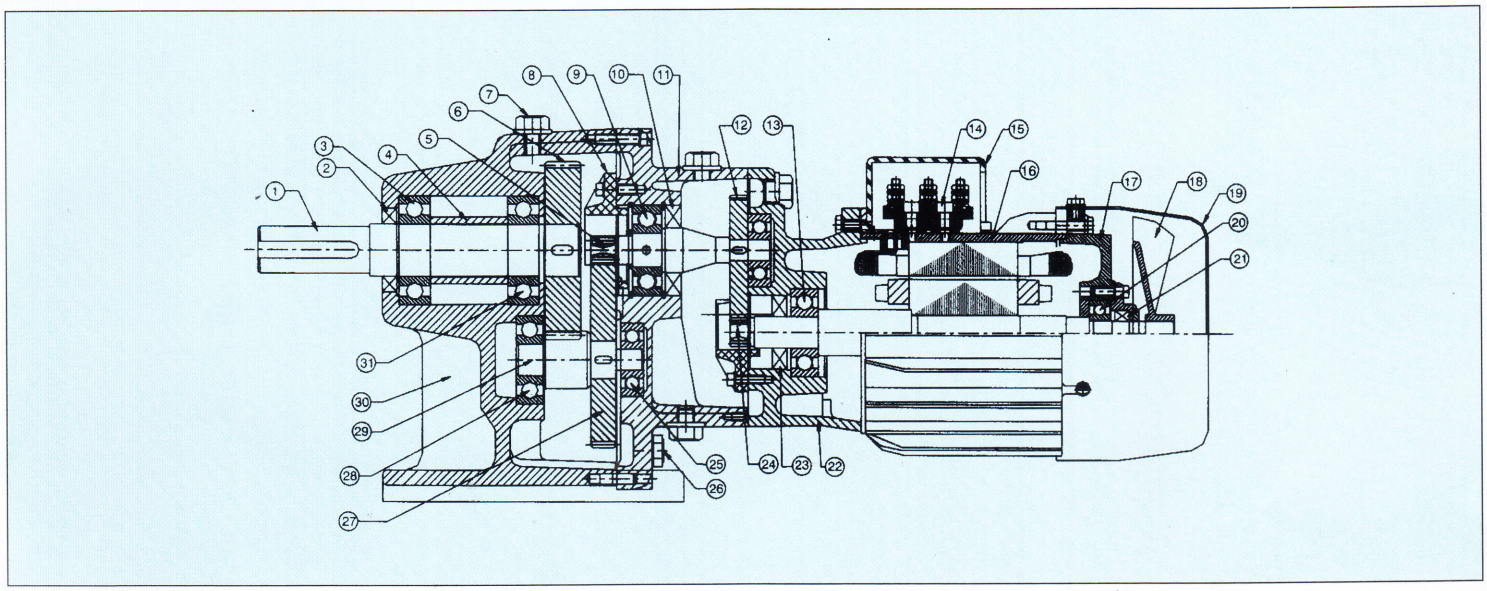

1. OUTPUT SHAFT
2. OIL SEAL
3. BEARING
4. SPACER SLEEVE
5. II STAGE INPUT PINION
6. OUTPUT WHEEL
7. BREATHER PLUG
8. SUPPORTING COLLAR
9. BEARING
10. OIL SEAL
11. COMBINATION COVER
12. I STAGE INERMEDIATE WHEEL
13. BEARING
14. TERMINAL BLOCK
15. TERMINAL BOX
16. CASING
17. END SHIELD
18. FAN BLADE
19. FAN COWL
20. BEARING
21. OIL SEAL
22. COVER
23. OIL SEAL
24. TOOTHED SHAFT
25. BEARING
26. DRAIN PLUG
27. II STAGE INTERMEDIATE WHEEL
28. BEARING
29. III STAGE INTERMEDIATE SHAFT
30. FOOT (FLANGE) MOUNTED HOUSING
31. BEARING

PRODUCT RANGE

REMI GROUP

FLP Motors :

- Frame Size 63 to 160
- Suitable for GAS Group, IIA, IIB
- Approved by ERTL
- Approved by Bureau of Indian Standards (BIS)
- Approved by PESO
- Approved by Directorate General Factory Advice Services & Labour Institute (DGFASLI) Mumbai

STD Motors :

- 0.12 HP to 75 HP
- High Eff Motors as per IS 12615.
- Low Watt loss high grade CRNGO
- German 'VEM' design of stamping
- Special modified wires for 'F' class insulation

Single Phase Motors :

- Without Centrifugal Switch, therefore practically maintenance free
- Compact Capacitor Run Motor. Suitable for high starting torque applications, confirm with REMI

Gear Box :

- Any IEC frame motor can be coupled
- Gear design form 'STEPHAN' Germany
- Gear manufactured as per DIN standard
- 'Block' / 'Unicase' design of gear housing

Geared motors :

- Gears manufactured as per DIN standards
- Gear design from 'STEPHAN' Germany
- 'Block' / 'Unicase' design of gear housing
- High power to weight ratio, as Integral Motors
- High precision machines used only.

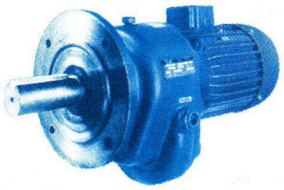

Other REMI Products :

- Stainless Steel Pipes, Tubes
- Domestic Fans
- Industrial agitators
- Lab Instruments / Stirrers
- Blood Banking Equipments

REMI ELEKTROTECHNIK LIMITED

Corporate office :
Remi House 11, Cama Industrial Estate,
Goregaon (East), Mumbai - 400 063.
- Tel.: 022-40589888 • Fax : 022 - 26850888
- E-mail : motors@remigroup.com

Works :
Survey No. 65/1, Naik Pada, Waliv Village,
Taluka : Vasai (E), Dist.:Palghar - 401208.
- Tel.: +91 8446013182 to 85
- E-mail : rei_works@remigroup.com

SALES AND SERVICE : REMI SALES & ENGINEERING LTD.

AHMEDABAD : 18A/19A, M R Estate , Kanchan Pharma ni Gali, Nr. Aslali Bypass , Aslali-382427
Dist. Ahmedabad, Gujarat
Tel. 02718-297978 / 90330 93950
Fax : 079-2646 4081, E-mail : motorsahmd@remigroup.com

BANGALORE : 8/1, 3rd Cross, Shamanna Garden, Adugodi Post, Bangalore - 560030
Tel.: 080-2222 4423.
Email : motorsbang@remigroup.com

CHENNAI : Post Box 3705, 59, Anna Salai, Chennai : 600 002.
Tel.: 044-2815 8622 / 2854 6356 / 3295 1155
Fax : 044-2841 1952. E-mail : motorschennai@remigroup.com

SECUNDERABAD : Plot No.21 & 22, Meena Arcade, A-2, Moti Valley, Goyal Co-operative Housing Society, Tirumalgherry, Secunderabad – 500 015.
Telangana State, India. Tel.: 040-27846682 / 27846683
E-mail: motorshyd@remigroup.com

INDORE : G-1, Royal Regency, Plot No. 377, Goyal Nagar, Madhavrao Sindhiya Square, Ring Road, Near Bank of Baroda,
Tel.: +91 7314932606, E-mail : indore@remigroup.com

KANPUR : 112/1-C, 1st Floor, Benajhabar Road, Swaroop Nagar, Kanpur - 208 002.
Tel.: 0512-2551660, E-mail : remisale@gmail.com

KOCHI : House No. 70/1750, Link Park Colony, Pottakuzhi Road, Pachalam, Kochi.
Tel.: 0484-2401361, E-mail : kochi@remigroup.com

KOLKATA : Bando House, 29, Ganesh Chandra Avenue, Kolkata - 700 013. West Bengal.
Tel: 033-2211 6367 / 82320 50245 / 82320 67745.
E-mail : motorskolkata@remigroup.com

NAGPUR : Saraf Court, Dhantoli, Nagpur : 440 012.
Tel : 0712-2522 575 / 2543 077, Fax : 0712-2548 156
E-mail : remisalesngp@gmail.com

NEW DELHI : No. B-25, 2nd Floor, 'B' Block, Community Center, Janakpuri, New Delhi - 110058
Tel. No. 011-49728300 Ext. 27
E-mail : motorsdelhi@remigroup.com

GOA : S-4, 2nd Floor, Vergincar Empressa, Opp. Saraswat Co-op.Bank, Margao, Goa - 403 601. Tel.: 07767855223
E-mail: jyotendra_nayak@yahoo.com