REMI Three Phase Induction Motors
0.09 KW to 55.0 KW (0.12 HP to 75.0 HP)

REMI

STANDARD MOTORS with 'IE2'

(0.09 KW TO 55 KW)

Why REMI Motors ?

German Technology

Vacuum impregnation of Winding

Low Noise & Vibration

Can offer Non Standard/

Custom Built Special Motors

Price & Delivery Advantage

All India Sales & Service Back up

REMI Totally Enclosed Fan Cooled Induction motors are Ac 3 Phase Squirrel Cage Induction Motors, designed by our licensor VEB Kombinat Electromaschinenbau Germany. The motors are manufactured in modern factory having vacuum impregnation plant for winding and centrifugal die-casting for rotors. The quality is ensured by latest testing facilities, innovative production techniques and strict quality control.

CONSTRUCTION : The stator and rotor core is made of low loss high grade CRNO steel laminations for higher efficiency. The rotor is dynamically balanced. The terminal box can be shifted by 90°. These motors are offered with IP-55 protection and enclosure confirming to IC411. The motors are offered in standard foot mounting (B3), Flange Mounting (B5) and face mounting (B14) versions. Non standard Mountings and shaft extensions can also be offered on request.

WINDINGS : Winding insulation is class 'F' Specially treated to withstand 90% relative humidity.

POWER SUPPLY REMI : 'IE2' motors are suitable for Standard Voltage (415V+/-10%) and Frequency (50 Hz +/- 5%). Motors for special voltage and frequency can be supplied on request.

Standard Motors below 2.2 KW (3 HP) can be started direct on line and hence these motors are available with three terminals in Terminal Box Motors above this size are delta connected with six terminals in Terminal Box.

EFFICIENCY : REMI 'IE2'motors are energy efficient thereby resulting in power saving. REMI 'IE2'motors meet the efficiency values of 'IE2' as per IS 12615:2018.

SUITABILITY FOR INVERTER APPLICATION: REMI 'IE2' motors are generally suitable for 3 Phase or 1 Phase inverters, subject to following guidelines.

- Motor to be used with 3 phase inverter needs 415 volts, 50 Hz, 3 Phase supply and all our standard 415 V motors, with 3 leads upto 2.2 KW & 6 leads for 3.7 KW and above can be used.

- Motor to be used with Single Phase inverter needs 240 Volts / 230 Volts / 220 Volts, 3 Phase. supply to motor terminals. **REMI** 'IE2' motors upto 2.2 KW (3.00 HP) can therefore be supplied with 240 volts, 3 leads without extra price. However if required dual voltage motors 240 V / 415 V with 6 leads for this purpose, the same can be supplied with extra price.

- Deration of T.E.F.C. Motors for inverter application, may be required depending on nature of application. Please refer to us for the same along with details of application.

- For Satisfactory operation with inverter, care should be taken to ensure.
  - √ Proper programming of V/F pattern to avoid appreciable increase in on load current specially at lower frequenciese.
  - √ Proper selection of inverter carrier frequency to avoid noise
  - √ Proper length of the cable between inverter and motor within the maximum length specified by the inverter manufacturer.
  - √ Proper earthing is provided to the motor.

REMI ELEKTROTECHNIK LIMITED

CE ISI IS :12615 For Electric Motors

IE2

REMI 'KER' SERIES THREE PHASE MOTOR PERFORMANCE CHART

Frame Size	k.W.	H.P.	R.P.M.	Current @ 415 V	Eff %	PF	STG C % FLC	STG T % FLT	GD2 Kg-cm2
3000 RPM									
56 A/2(B3)	0.12	0.16	2760	0.32	53.6	0.84	430	200	8
63 A/2R	0.18	0.25	2800	0.52	60.4	0.78	400	200	8
63 B/2R	0.25	0.33	2790	0.74	64.8	0.80	415	220	10
71 A/2R	0.37	0.50	2860	0.9	69.5	0.78	550	190	19
71 C/2R	0.55	0.75	2870	1.5	74.1	0.80	600	220	25
80 A/2R	0.75	1.0	2870	1.8	77.4	0.80	620	260	38
80 A/2U	1.1	1.5	2870	2.4	79.6	0.84	650	260	48
90S B/2	1.5	2.0	2850	3.0	81.3	0.86	650	260	86
90L B/2T	2.2	3.0	2810	4.3	83.2	0.88	650	230	98
100L D/2R	3.7	5.0	2880	7.1	85.5	0.88	700	210	210
132S B/2R	5.5	7.5	2900	11.0	87.0	0.85	700	210	737
132S B/2	7.5	10.0	2890	14.8	88.1	0.86	690	215	790
160M B/2	11.0	15.0	2910	21.0	89.4	0.92	700	200	2885
160M C/2T	15.0	20.0	2910	27.0	90.3	0.88	700	240	3700
160L C/2R	18.5	25.0	2900	31.8	90.9	0.92	700	250	2800
180M B/2R	22.0	30.0	2920	36.8	91.3	0.92	700	240	6750
200L B/2R	30.0	40.0	2920	51.3	92.0	0.92	700	240	5228
200L C/2	37.0	50.0	2950	62.0	92.5	0.92	700	240	6370
1500 RPM									
63 A/4R(B5)	0.12	0.16	1320	0.43	59.1	0.76	275	170	10
63 B/4R	0.18	0.25	1330	0.60	64.7	0.74	275	170	13
71 A/4	0.25	0.33	1340	0.74	68.5	0.71	330	180	25
71 C/4T	0.37	0.50	1370	1.1	72.7	0.65	450	200	33
80 A/4T	0.55	0.75	1430	1.6	77.1	0.60	500	250	53
80 B/4T	0.75	1.0	1430	1.9	79.6	0.69	600	300	81
90S C/4	1.1	1.5	1430	2.9	81.4	0.69	600	300	122
90L C/4T	1.5	2.0	1410	3.6	82.8	0.77	600	300	150
100L C/4	2.2	3.0	1435	5.0	84.3	0.82	700	250	246
112M B/4	3.7	5.0	1440	7.2	86.3	0.84	700	230	601
132S B/4Q	5.5	7.5	1445	11.4	87.7	0.81	650	250	960
132M B/4	7.5	10.0	1445	15.0	88.7	0.82	650	170	1263
160M B/4	11.0	15.0	1465	22.0	89.8	0.81	700	270	3469
160L C/4T	15.0	20.0	1450	27.6	90.6	0.85	700	215	3200
180M B/4R	18.5	25.0	1455	34.5	91.2	0.84	700	290	5906
180L B/4R	22.0	30.0	1455	40.5	91.6	0.84	700	300	7968
200L B/4R	30.0	40.0	1465	53.4	92.3	0.86	630	180	10981
225S A/4	37.0	50.0	1480	62.5	92.7	0.88	680	220	15300
225 MB/4	45.0	60.0	1480	77.0	93.1	0.83	700	220	18850
250M B/4	55.0	75.0	1485	95.5	93.5	0.88	660	220	36820
1000 RPM									
71 C/6Q	0.12	0.16	875	0.52	50.6	0.60	210	140	25
71 B/6R	0.18	0.25	900	0.80	56.6	0.60	240	170	33
80 A/6Q	0.25	0.33	900	0.79	61.6	0.66	330	210	53
80 A/6R	0.37	0.50	900	1.1	67.6	0.76	300	160	53
80 B/6T	0.55	0.75	910	1.6	73.1	0.68	390	250	73
90S B/6	0.75	1.0	920	2.1	75.9	0.72	380	200	127
90L C/6	1.1	1.5	920	3.0	78.1	0.72	390	225	170
100L C/6	1.5	2.0	920	3.7	79.8	0.76	450	210	383
112M B/6	2.2	3.0	950	5.1	81.8	0.78	550	220	643
132M B/6	3.7	5.0	945	7.6	84.3	0.82	520	160	1200
132M B/6T	5.5	7.5	945	11.7	86.0	0.82	540	200	1500
160M B/6	7.5	10.0	970	15.0	87.2	0.83	500	160	3400
160L C/6T	11.0	15.0	970	21.0	88.7	0.84	500	160	4500
180L B/6R	15.0	20.0	955	28.0	89.7	0.85	650	200	6670
200L B/6Q	18.5	25.0	955	34.4	90.4	0.85	625	190	10780
200L B/6R	22.0	30.0	955	40.5	90.9	0.85	630	190	13450
750 RPM									
80 A 8R	0.18	0.25	670	0.70	45.90	0.62	225	180	53
80 A 8T	0.25	0.33	670	1.08	50.60	0.64	240	185	67
90S A/8T	0.37	0.50	670	1.45	56.10	0.60	300	200	115
90L C/8R	0.55	0.75	680	2.10	61.70	0.68	330	220	142
100L B/8	0.75	1.0	690	2.50	66.20	0.72	340	205	308
100L C/8R	1.10	1.5	675	3.25	70.80	0.72	300	185	406
112M A/8T	1.50	2.0	700	4.20	74.10	0.76	430	200	643
132S A/8R	2.20	3.0	700	5.10	77.60	0.78	400	145	1200
160M A/8R	3.7	5.0	710	8.30	81.40	0.82	370	170	2800
160M A/8	5.50	7.5	710	12.20	83.80	0.82	400	165	3400
160L C/8R	7.5	10.0	715	16.6	85.3	0.83	420	165	4500
180L C/8	11.0	15.0	710	25.0	86.9	0.84	450	170	6670
200L B/8R	15.0	20.0	720	29.0	88.0	0.84	600	200	13450

NOTE : Performance figures are subject to tolerance and effectiveness are without oil seals.

DIMENSIONS OF FOOT MOUNTED MOTOR (B3)

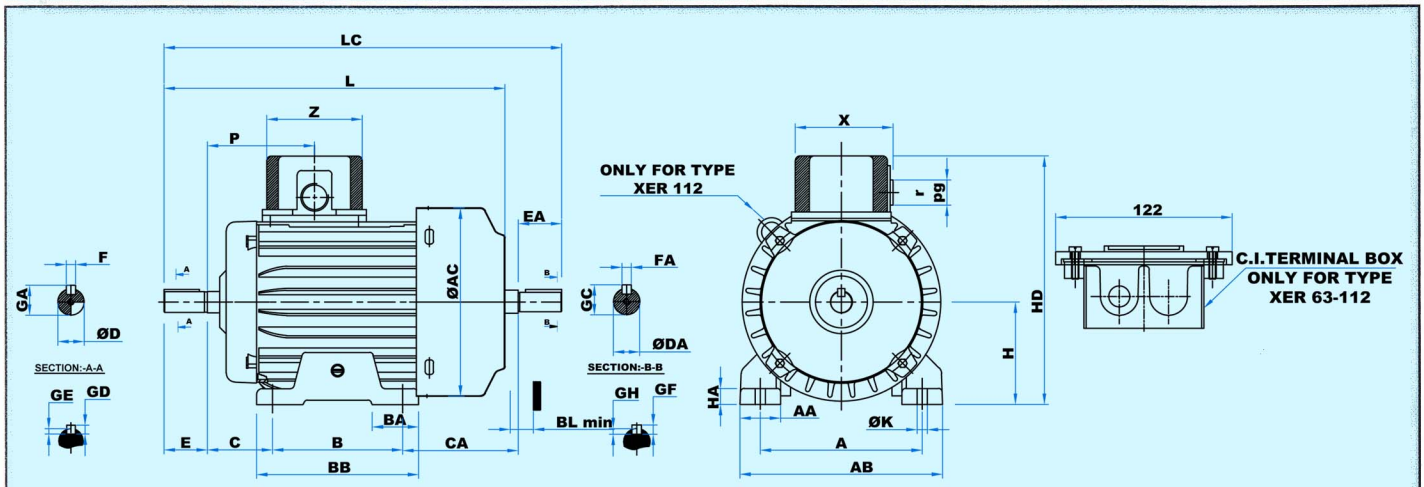

All Dimensions are in mm.

Frame	B	A	HA	D	DA	BB	AB	L	LC	AC	H	HD	E	EA	BA	AA	K	GA	GC	F	FA	GD	GF	GE	GH	x	z	C	CA	P	BL Min.
63 A	80	100	10	11	11	105	125	200	235	122	63	150	23	23	28	25	7	13	13	4	4	4	4	2.5	2.5	57	59	40	49	65	14
63 B	80	100	10	11	11	105	125	220	255	122	63	150	23	23	28	25	7	13	13	4	4	4	4	2.5	2.5	57	59	40	49	65	14
71 A	90	112	11	14	14	115	140	220	260	138	71	165	30	30	32	28	7	16	16	5	5	5	5	3.0	3.0	57	59	45	50	74	16
71 C	90	112	11	14	14	115	140	240	280	138	71	165	30	30	32	28	7	16	16	5	5	5	5	3.0	3.0	57	59	45	71	74	16
80 A	100	125	12	19	16	125	157	275	325	155	80	190	40	40	30	32	10	22	18	6	5	6	5	3.5	3.5	67	69	50	80	80	16
80 B	100	125	12	19	16	125	157	295	345	155	80	190	40	40	30	32	10	22	18	6	5	6	5	3.5	3.5	67	69	50	100	80	16
90 B	100	140	13	24	19	130	175	325	375	174	90	220	50	40	60	35	10	27	22	8	6	7	6	4.0	4.0	67	69	56	109	83	18
90 C	125	140	13	24	19	155	175	350	400	174	90	220	50	40	60	35	10	27	22	8	6	7	6	4.0	4.0	67	69	56	109	83	18
100 C	140	160	15	28	24	175	200	380	440	194	100	240	60	50	66	40	12	31	27	8	8	7	7	4.0	4.0	67	69	63	105	86	20
100 D	140	160	15	28	24	175	200	415	475	194	100	240	60	50	66	40	12	31	27	8	8	7	7	4.0	4.0	67	69	63	137	86	20
112 A	140	190	18	28	28	180	232	375	445	219	112	235	60	60	44	46	12	31	31	8	8	7	7	4.0	4.0	67	69	70	152	88	22
112 B	140	190	18	28	28	180	232	400	470	219	112	235	60	60	44	46	12	31	31	8	8	7	7	4.0	4.0	67	69	70	190	88	22

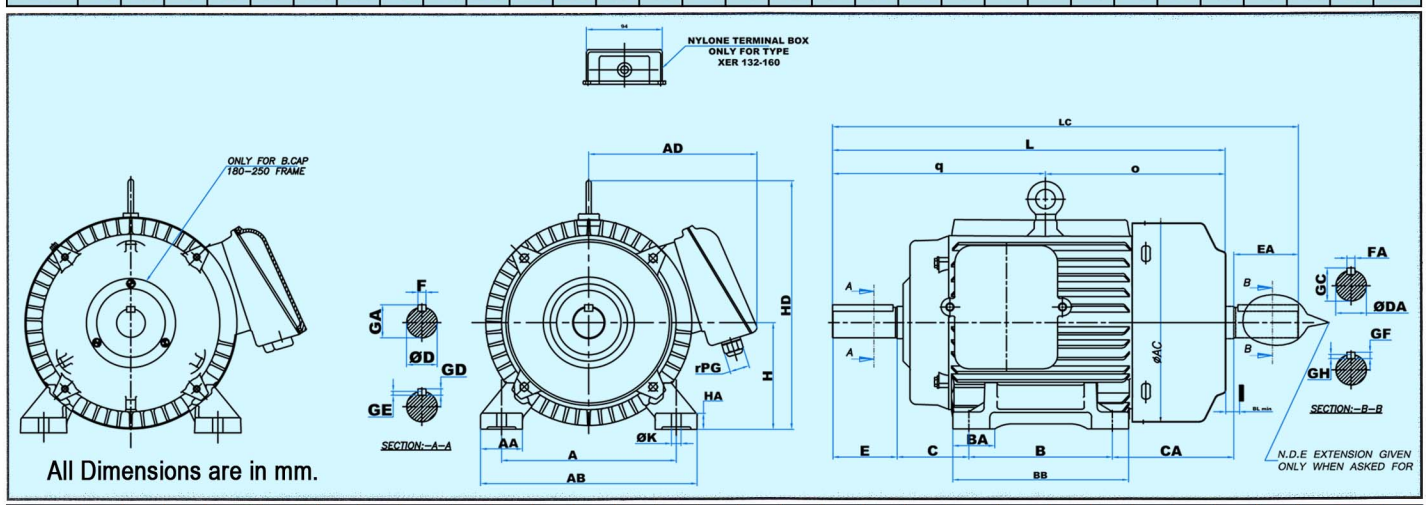

All Dimensions are in mm.

Frame	B	A	HA	ØD -0.1	ØDA -0.1	BB	AB	ØAC	H	E	EA	L	LC	q	o	BA	AA	AD	HD	ØK	GA	GC	F	FA	GD	GF	GE	GH	rPG	BL	C
132S A	140	216	20	38	32	180	260	262	132	80	80	458	539	245	213	52	52	216	308	12	41	35	10	10	8	8	5	5	21	25	89
132S B	140	216	20	38	32	180	260	262	132	80	80	496	577	264	232	52	52	216	308	12	41	35	10	10	8	8	5	5	21	25	89
132M B	178	216	20	38	32	218	260	262	132	80	80	496	577	264	232	52	52	216	308	12	41	35	10	10	8	8	5	5	21	25	89
160M A	210	254	22	42	38	262	330	310	160	110	80	570	635	314	236	68	68	260	370	15	45	41	12	10	8	8	5	5	29	30	108
160M B	210	254	22	42	38	262	330	310	160	110	80	582	667	323	259	68	68	260	370	15	45	41	12	10	8	8	5	5	29	30	108
160M C	210	254	22	42	38	262	330	310	160	110	80	660	736	350	282	68	68	260	370	15	45	41	12	10	8	8	5	5	29	30	108
160L C	254	254	22	42	38	306	330	310	160	110	80	660	736	350	282	68	68	260	370	15	45	41	12	10	8	8	5	5	29	30	108
180M B	241	279	24	48	42	345	362	347	180	110	110	665	780	352	313	80	80	280	424	15	51.5	45	14	12	9	8	5.5	5	29	35	121
180M C	241	279	24	48	42	345	362	347	180	110	110	730	845	379	351	80	80	280	424	15	51.5	45	14	12	9	8	5.5	5	29	35	121
180L B	279	279	24	48	42	345	362	347	180	110	110	665	780	352	313	80	80	280	424	15	51.5	45	14	12	9	8	5.5	5	29	35	121
180L C	279	279	24	48	42	345	362	347	180	110	110	730	845	379	351	80	80	280	424	15	51.5	45	14	12	9	8	5.5	5	29	35	121
200L A	305	318	28	55	48	375	410	387	200	110	110	678	793	357	321	92	92	320	460	19	59	51.5	16	14	10	9	6	5.5	40	133	133
200L B	305	318	28	55	48	375	410	387	200	110	110	730	833	377	341	92	92	320	460	19	59	51.5	16	14	10	9	6	5.5	40	133	133
225 S	286	356	32	60	-	414	430	446	225	140	-	840	-	431	409	125	94	325	507	19	64	-	18	-	11	-	7	-	40	149	149
225 M	311	356	32	60	-	414	430	446	225	140	-	871	-	463	408	125	94	325	507	19	64	-	18	-	11	-	7	-	40	149	149
250 M	349	406	34	65	-	443	499	492	250	140	-	928	-	486	442	125	100	325	584	24	69	-	18	-	11	-	7	-	40	168	168

DIMENSIONS OF FLANGE MOUNTED MOTORS (B5)

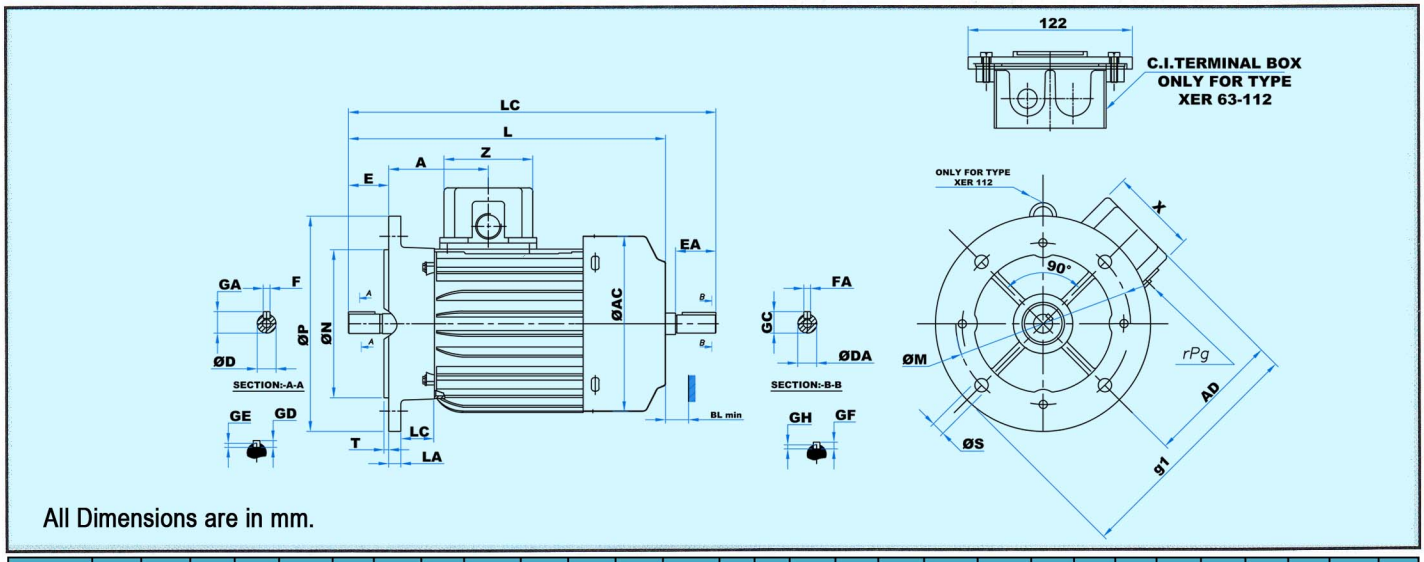

All Dimensions are in mm.

Frame	ØP	ØN	LA	T	ØM	A	g1	ØD	ØDA	L	L1	AD	ØAC	Z	X	ØS	E	EA	GA	GC	GD	GF	F	FA	GE	GH	BL	rPG	LC
63 A	140	95	9	3.0	115	65	158	11	11	215	248	85	122	57	59	10	23	23	12.5	12.5	4.0	4.0	4.0	4.0	2.5	2.5	14	3/4" BSC	25
63 B	140	95	9	3.0	115	65	158	11	11	229	262	85	122	57	59	10	23	23	12.5	12.5	4.0	4.0	4.0	4.0	2.5	2.5	14	"	25
71 A	160	110	9	3.5	130	74	185	14	14	220	260	95	138	57	59	10	30	30	16.0	16.0	5.0	5.0	5.0	5.0	3.0	3.0	16	"	32
71 B	160	110	9	3.5	130	74	185	14	14	230	270	95	138	57	59	10	30	30	16.0	16.0	5.0	5.0	5.0	5.0	3.0	3.0	16	"	32
71 C	160	110	9	3.5	130	74	185	14	14	240	280	95	138	57	59	10	30	30	16.0	16.0	5.0	5.0	5.0	5.0	3.0	3.0	16	"	32
80 A	200	130	10	3.5	165	80	208	19	16	275	325	108	155	67	69	12	40	40	21.5	18.0	6.0	5.0	6.0	5.0	3.5	3.0	16	"	35
80 B	200	130	10	3.5	165	80	208	19	16	295	345	108	155	67	69	12	40	40	21.5	18.0	6.0	5.0	6.0	5.0	3.5	3.0	16	"	35
90 B	200	130	10	3.5	165	83	215	24	19	350	400	115	174	67	69	12	50	40	27.0	21.5	7.0	6.0	8.0	6.0	4.0	3.5	18	"	40
90 C	200	130	10	3.5	165	83	215	24	19	335	395	115	174	67	69	12	50	40	27.0	21.5	7.0	6.0	8.0	6.0	4.0	3.5	18	"	40
100 C	250	180	11	4.0	215	86	248	28	24	375	435	123	194	67	69	15	60	50	31.0	27.0	7.0	7.0	8.0	6.0	4.0	4.0	20	"	45
100 D	250	180	11	4.0	215	86	248	28	24	410	470	123	194	67	69	15	60	50	31.0	27.0	7.0	7.0	8.0	6.0	4.0	4.0	20	"	45
112 A	250	180	11	4.0	215	88	290	28	28	375	445	150	219	67	69	15	60	60	31.0	31.0	7.0	7.0	8.0	8.0	4.0	4.0	22	"	45
112 B	250	180	11	4.0	215	88	290	28	28	400	470	150	219	67	69	15	60	60	31.0	31.0	7.0	7.0	8.0	8.0	4.0	4.0	22	"	45

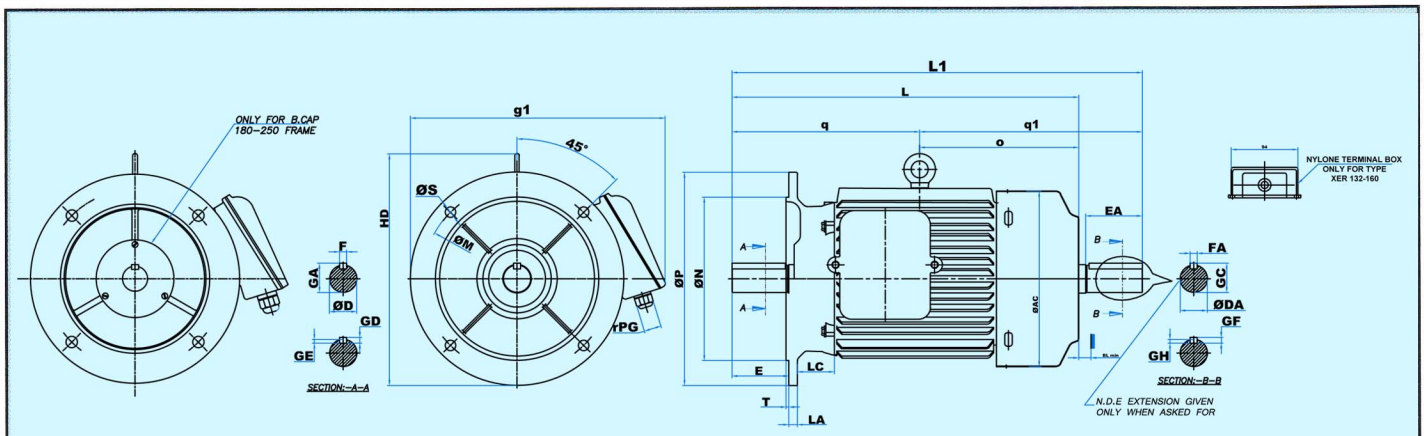

All Dimensions are in mm.

Frame	ØP	ØN	LA	T	ØM	g1	HD	ØD +0.002 -0.003	ØDA	L	L1	ØAC	q	q1	o	ØS	E	EA	GA	GC	GD	GF	F	FA	GE	GH	rPG	LC	BL
132S A	300	230	12	4	265	356	326	38	32	458	539	260	245	293	213	15	80	80	41.0	35	8	8	10	10	5	5	21	54	25
132M B	300	230	12	4	265	356	326	38	32	496	577	260	245	313	232	15	80	80	41.0	35	8	8	10	10	5	5	21	54	25
160M A	350	250	13	5	300	428	385	42	38	550	635	310	314	326	236	19	110	80	45.0	41	8	8	12	10	5	5	29	58	30
160M B	350	250	13	5	300	428	385	42	38	582	667	310	323	342	259	19	110	80	45.0	41	8	8	12	10	5	5	29	58	30
160M C	350	250	13	5	300	428	385	42	38	651	736	310	350	370	282	19	110	80	45.0	41	8	8	12	10	5	5	29	58	30
160L C	350	250	13	5	300	428	385	42	38	651	736	310	350	370	282	19	110	80	45.0	41	8	8	12	10	5	5	29	58	30
180M B	350	250	13	5	300	464	393	48	42	665	780	347	352	403	313	19	110	110	51.5	45	9	8	14	12	5.5	5	29	72	35
180M C	350	250	13	5	300	464	393	48	42	730	845	347	379	431	351	19	110	110	51.5	45	9	8	14	12	5.5	5	29	72	35
180L B	350	250	13	5	300	464	393	48	42	665	780	347	352	403	313	19	110	110	51.5	45	9	8	14	12	5.5	5	29	72	35
180L C	350	250	13	5	300	464	393	48	42	730	845	347	379	431	351	19	110	110	51.5	45	9	8	14	12	5.5	5	29	72	35
200L A	400	300	15	5	350	525	450	55	48	678	793	387	357	417	321	19	110	110	59	51.5	10	9	16	14	6	5.5	36	80	40
200L B	400	300	15	5	350	525	450	55	48	718	833	387	377	436	341	19	110	110	59	51.5	10	9	16	14	6	5.5	36	80	40

REMI 'KER' SERIES DUAL SPEED MOTOR RATING CHART

FRAME	K.W.	H.P.	SYN. R.P.M.
71 A/4-2	0.18 / 0.25	0.24 / 0.34	1500 / 3000
71 C/4-2	0.3 / 0.4	0.4 / 0.54	1500 / 3000
80 A/4-2	0.46 / 0.6	0.61 / 0.81	1500 / 3000
80 B/4-2	0.55 / 0.55	0.75 / 0.75	1500 / 3000
80 B/4-2	0.6 / 0.8	0.8 / 1.1	1500 / 3000
90S B/4-2	0.8 / 1.1	1.1 / 1.5	1500 / 3000
90L C/4-2	1.1 / 1.5	1.5 / 2.0	1500 / 3000
100L C/4-2	1.65 / 2.2	2.2 / 3.0	1500 / 3000
112S A/4-2	23 / 3.0	3.1 / 4.1	1500 / 3000
112M B/4-2	29 / 4.0	3.9 / 5.3	1500 / 3000
132S A/4-2	395 / 4.65	5.2 / 6.2	1500 / 3000
132M B/4-2	525 / 6.3	7 / 8.4	1500 / 3000
160M A/4-2	685 / 8.25	9.1 / 11	1500 / 3000
160M B/4-2	8.6 / 10.37	11.5 / 13.8	1500 / 3000
160L C/4-2	10.5 / 12.6	14 / 16.8	1500 / 3000
80 A/8-4	.0.14 / 0.25	0.19 / 0.34	750 / 1500
90S A/8-4	0.2 / 0.37	0.3 / 0.5	750 / 1500
90S B/8-4	0.33 / 0.55	0.41 / 0.75	750 / 1500
100L B/8-4	0.5 / 0.8	0.68 / 1.1	750 / 1500
100L C/8-4	0.65 / 1.1	0.88 / 1.5	750 / 1500

FRAME	K.W.	H.P.	SYN.R.P.M
100L D/ 8-4	0.75 / 1.5	1 / 2	750 / 1500
112S A/8-4	1.1 / 1.7	1.5 / 2.3	750 / 1500
112M B/8-4	1.4 / 2.3	1.9 / 3.1	750 / 1500
132S A/8-4	1.8 / 2.7	2.4 / 3.7	750 / 1500
132M B/8-4	2.3 / 3.4	3.1 / 4.6	750 / 1500
160M A/8-4	3 / 1.5	4 / 6	750 / 1500
160M A/8-4	3.2 / 5.5	4.4 / 7.5	750 / 1500
160M B/8-4	4.2 / 6.15	5.6 / 8.2	750 / 1500
160L C/8-4	5.5 / 8.25	7.5 / 11	750 / 1500
112S A/6-4	1.1 / 1.5	1.5 / 2	1000 / 1500
112M B/6-4	1.35 / 2	1.8 / 2.7	1000 / 1500
132M B/6-4	3.7 / 5.5	5 / 7.5	1000 / 1500
160M B/6-4	2.1 / 7	2.9 / 9.4	1000 / 1500
160M B/6-4	3.9 / 7.8	5.33 / 10.66	1000 / 1500
180M B/6-4	5.2 / 9.4	7 / 12.5	1000 / 1500
90L C/8-2	0.2 / 0.8	0.28 / 1.1	750 / 3000
100L C/8-2	0.37 / 1.5	0.5 / 2	750 / 3000
112S A/8-2	0.75 / 1.1	1 / 1.5	750 / 3000
112M B/8-2	055 / 2.2	0.75 / 3.0	750 / 3000
132M B/8-2	1.4 / 5.6	1.9 / 7.5	750 / 3000

DIMENSIONS OF FACE MOUNTED MOTORS (B14)

All Dimensions are in mm.

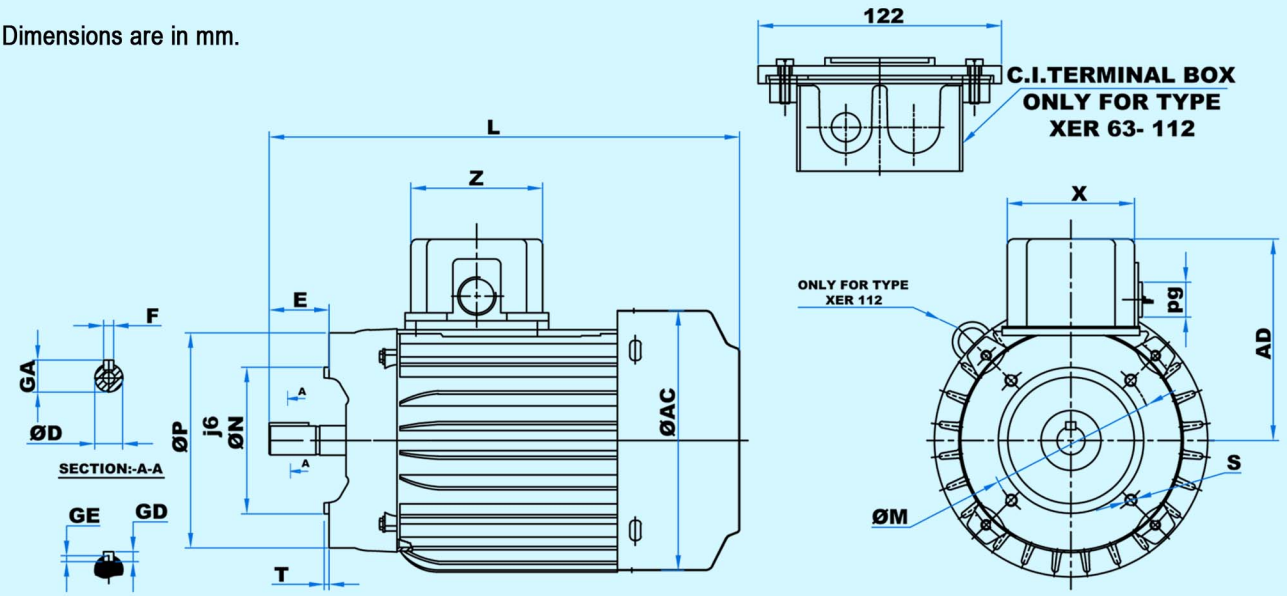

Frame	L	AC	AD	D	E	F	GA	GD	P	M	N	S	T	Z	X	rPG
63 A	201.0	122.0	85.0	11.0	23.0	4.0	12.5	4.0	90.0	75.0	60.0	M5	2.5	57.0	59.0	3/4" BSC
63 B	216.0	122.0	85.0	11.0	23.0	4.0	12.5	4.0	90.0	75.0	60.0	M5	2.5	57.0	59.0	"
71 A	217.0	138.0	95.0	14.0	30.0	5.0	16.0	5.0	105.0	85.0	70.0	M6	2.5	67.0	69.0	"
71 B	228.0	138.0	95.0	14.0	30.0	5.0	16.0	5.0	105.0	85.0	70.0	M6	2.5	67.0	69.0	"
71 C	240.0	138.0	95.0	14.0	30.0	5.0	16.0	5.0	105.0	85.0	70.0	M6	2.5	67.0	69.0	"
80 A	270.0	155.0	108.0	19.0	40.0	6.0	21.5	6.0	120.0	100.0	80.0	M6	3.0	67.0	69.0	"
80 B	295.0	155.0	108.0	19.0	40.0	6.0	21.5	6.0	120.0	100.0	80.0	M6	3.0	67.0	69.0	"
90SB	330.0	174.0	115.0	24.0	50.0	8.0	27.0	7.0	135.0	115.0	95.0	M8	3.0	67.0	69.0	"
90LC	355.0	174.0	115.0	24.0	50.0	8.0	27.0	7.0	135.0	115.0	95.0	M8	3.0	67.0	69.0	"
100LC	387.0	194.0	123.0	28.0	60.0	8.0	31.0	7.0	150.0	130.0	110.0	M8	3.5	67.0	69.0	"
100LD	419.0	194.0	123.0	28.0	60.0	8.0	31.0	7.0	150.0	130.0	110.0	M8	3.5	67.0	69.0	"
112MB	431.0	219.0	134.0	28.0	60.0	8.0	31.0	7.0	180.0	130.0	110.0	M8	3.5	67.0	69.0	"
112MC	470.0	219.0	134.0	28.0	60.0	8.0	31.0	7.0	180.0	130.0	110.0	M8	3.5	67.0	69.0	"
132SA	458.0	262.0	216.0	38.0	80.0	10.0	41.0	8.0	200.0	165.0	130.0	M10	3.5	-	-	"
132MB	496.0	262.0	216.0	38.0	80.0	10.0	41.0	8.0	200.0	165.0	130.0	M10	3.5	-	-	21.0

MOTORS WITH INBUILT STRENGTH

PRODUCT RANGE

REMI GROUP

FLP Motors :

- Frame Size 63 to 160
- Suitable for GAS Group, IIA, IIB
- Approved by ERTL
- Approved by Bureau of Indian Standards (BIS)
- Approved by PESO
- Approved by Directorate General Factory Advice Services & Labour Institute (DGFASLI) Mumbai

STD Motors :

- 0.12 HP to 75 HP
- High Eff Motors as per IS 12615.
- Low Watt loss high grade CRNGO
- German 'VEM' design of stamping
- Special modified wires for 'F' class insulation

Single Phase Motors :

- Without Centrifugal Switch, therefore practically maintenance free
- Compact Capacitor Run Motor. Suitable for high starting torque applications, confirm with REMI

Gear Box :

- Any IEC frame motor can be coupled
- Gear design form 'STEPHAN' Germany
- Gear manufactured as per DIN standard
- 'Block' / 'Unicase' design of gear housing

Geared motors :

- Gears manufactured as per DIN standards
- Gear design from 'STEPHAN' Germany
- 'Block' / 'Unicase' design of gear housing
- High power to weight ratio, as Integral Motors
- High precision machines used only.

Other REMI Products :

- Stainless Steel Pipes, Tubes
- Domestic Fans
- Industrial agitators
- Lab Instruments / Stirrers
- Blood Banking Equipments

REMI ELEKTROTECHNIK LIMITED

Corporate office :
Remi House 11, Cama Industrial Estate,
Goregaon (East), Mumbai - 400 063.
- Tel.: 022-40589888 • Fax : 022 - 26850888
- E-mail : motors@remigroup.com

Works :
Survey No. 65/1, Naik Pada, Waliv Village,
Taluka : Vasai (E), Dist.:Palghar - 401208.
- Tel.: +91 8446013182 to 85
- E-mail : rei_works@remigroup.com

SALES AND SERVICE : REMI SALES & ENGINEERING LTD.

AHMEDABAD : 18A/19A, M R Estate , Kanchan Pharma ni Gali, Nr. Aslali Bypass , Aslali-382427
Dist. Ahmedabad, Gujarat
Tel. 02718-297978 / 90330 93950
Fax : 079-2646 4081, E-mail : motorsahmd@remigroup.com

BANGALORE : 8/1, 3rd Cross, Shamanna Garden,
Adugodi Post, Bangalore - 560030
Tel.: 080-2222 4423.
Email : motorsbang@remigroup.com

CHENNAI : Post Box 3705, 59, Anna Salai,
Chennai : 600 002.
Tel.: 044-2815 8622 / 2854 6356 / 3295 1155
Fax : 044-2841 1952. E-mail : motorschennai@remigroup.com

GOA : S-4, 2nd Floor, Vergincar Empressa, Opp. Saraswat Co-op.Bank, Margao, Goa - 403 601. Tel.: 07767855223
E-mail: jyotendra_nayak@yahoo.com

SECUNDERABAD : Plot No.21 & 22, Meena Arcade,
A-2, Moti Valley, Goyal Co-operative Housing Society,
Tirumalgherry, Secunderabad – 500 015.
Telangana State, India. Tel.: 040-27846682 / 27846683
E-mail: motorshyd@remigroup.com

INDORE : G-1, Royal Regency, Plot No. 377,
Goyal Nagar, Madhavrao Sindhiya Square,
Ring Road, Near Bank of Baroda,
Tel.: +91 7314932606, E-mail : indore@remigroup.com

KANPUR : 112/1-C, 1st Floor, Benajhabar Road,
Swaroop Nagar, Kanpur - 208 002.
Tel.: 0512-2551660, E-mail : remisale@gmail.com

KOCHI : House No. 70/1750, Link Park Colony,
Pottakuzhi Road, Pachalam, Kochi.
Tel.: 0484-2401361, E-mail : kochi@remigroup.com

KOLKATA : Bando House, 29, Ganesh Chandra Avenue,
Kolkata - 700 013. West Bengal.
Tel: 033-2211 6367 / 82320 50245 / 82320 67745.
E-mail : motorskolkata@remigroup.com

NAGPUR : Saraf Court, Dhantoli,
Nagpur : 440 012.
Tel : 0712-2522 575 / 2543 077, Fax : 0712-2548 156
E-mail : remisalesngp@gmail.com

NEW DELHI : No. B-25, 2nd Floor, 'B' Block,
Community Center, Janakpuri, New Delhi - 110058
Tel. No. 011-49728300 Ext. 27
E-mail : motorsdelhi@remigroup.com

jyotartprinters77@yahoo.co.in